Grid-Forming Control for Off-Grid and On-Grid Microgrid Applications

Symposium on Microgrids, LUT University, Lappeenranta, Finland, June 2026

Danfoss Drives
Andrey Lana, Andreas Doktar, Khurram Shahzad



Danfoss in brief

We engineer solutions that increase machine productivity, reduce emissions, lower energy consumption, and enable electrification.

Business segments



Danfoss
Power Solutions

Share of sales: 44%

Full solutions across mobile and industrial hydraulics, fluid conveyance and data centers applications, electrification, and software.



Danfoss
Climate Solutions

Share of sales: 34%

Energy-efficient heating and cooling solutions for industrial applications, buildings, infrastructure, data centers and the cold chain.



Danfoss
Power Electronics and Drives

Share of sales: 22%

Power semiconductor modules, variable speed drives, and power conversion solutions engineered to enable electrification, and enhance energy efficiency and productivity across industries.

Worldwide sales

Americas
36%

Europe
40%

Asia Pacific
24%

Global sales

EUR 9.4b

Employees worldwide

39,353

As per annual report 2025

Danfoss Drives in numbers

Sales, EUR [1]

2.1bn

Cumulative drives delivered

39.4m

Drives experts

4000+

Countries + sales and service offices

100 + 80

Partner companies

1000

First mover since 1968

#1



Source: Danfoss Annual Report 2025

1] Revenue for combined business: Danfoss Power Electronics and Drives

Power conversion is a key enabler common to all applications



High-power, fast, and ultra-fast charging. Energy storage solutions



Electrification of mobile work machinery and equipment



Electrification of ports and marine vessels

H2

Enabling production of hydrogen to be utilized as ‘green fuel’

What is grid-forming?

Grid-following (GFL)

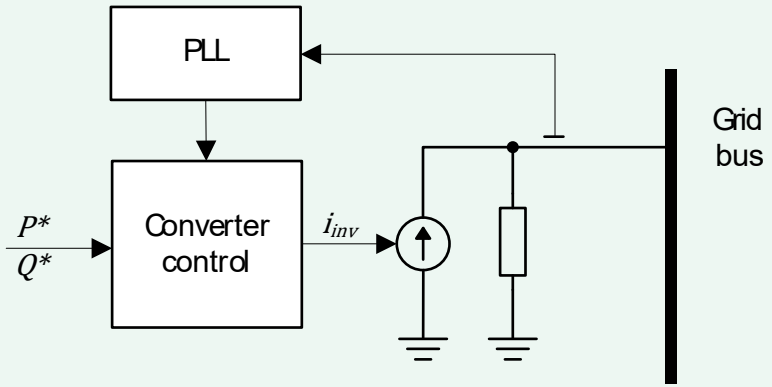

- Current source on the grid
- Uses phase-locked loop (PLL) to track grid voltage
- Follows power references regardless of grid state
- No inherent grid stabilizing behavior
- Cannot maintain grid by itself
- Not capable of black-starting grid
- Used in BESS, PV inverters and wind turbines

Grid-forming (GFM)

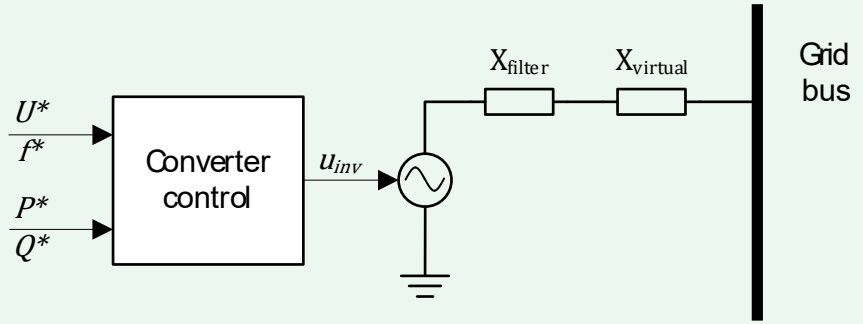

- Voltage source behind an impedance
- Forms grid with internal controls (droop or VSG)
- Immediate and inherent reaction to grid transient
- Can maintain grid by itself
- Capable of black-starting grid
- Used in BESS, more advanced PV inverters and wind turbines

Classified as Public

Example difference between GFL and GFM – voltage angle jump

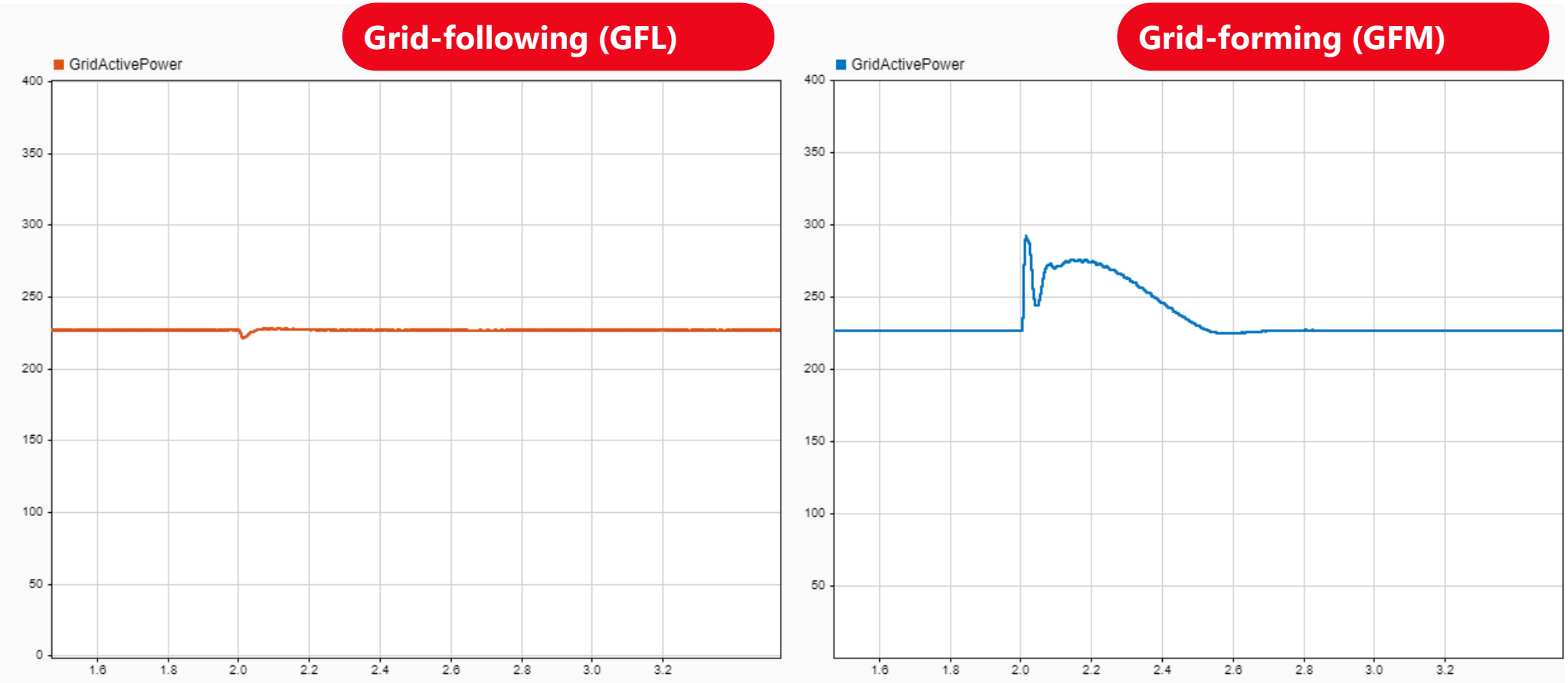

Which one is better?

Grid operators want inverters to resist angle jumps by injecting active power as in case of GFM

Classified as Public

Danfoss has delivered microgrid applications for >15 years

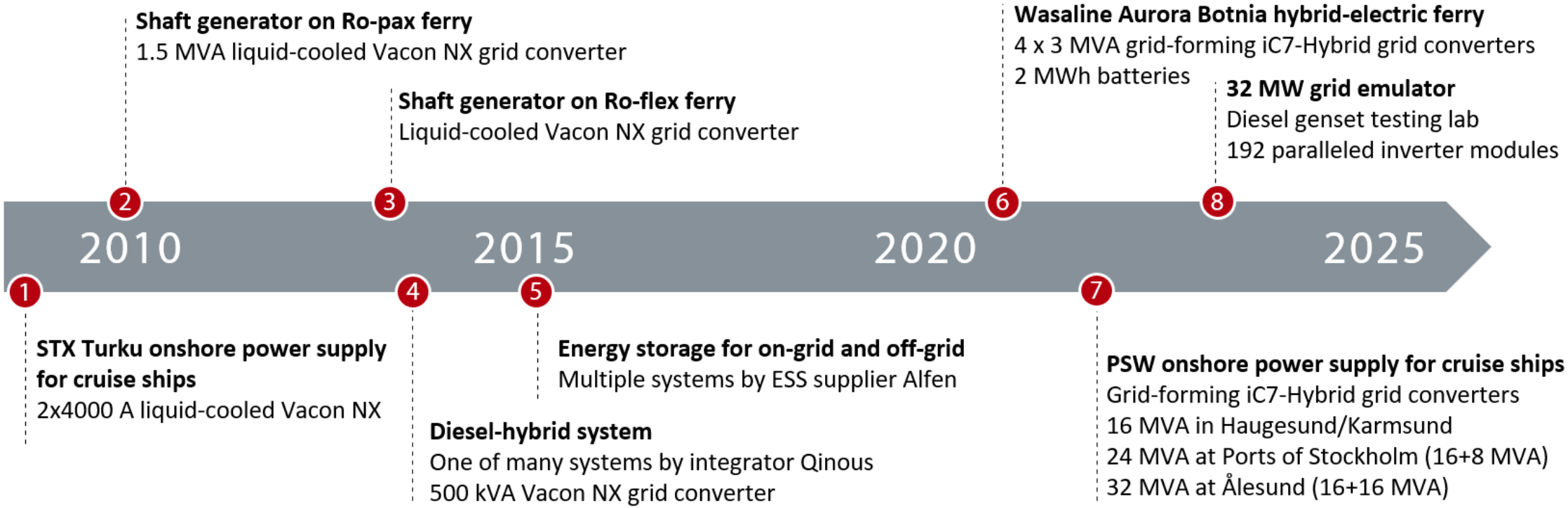

https://www.elleuno.eu/images/pdf/vacon-nxp-grid-converter-brochure-DPD01364A-englis.PDF
https://www.danfoss.com/en/service-and-support/case-stories/dds/energy-efficient-ro-pax-vessels/
https://www.danfoss.com/en/service-and-support/case-stories/dds/bore-sea-roflex-vessel-with-energy-efficient-shaft-generator-configuration/
https://www.danfoss.com/en/service-and-support/case-stories/dds/qinous-energy-storage-optimizes-co-generation-globally/
https://www.danfoss.com/en/service-and-support/case-stories/dds/alfen-energy-storage-enables-the-energy-grid-of-the-future/
https://www.danfoss.com/en/service-and-support/case-stories/dds/danfoss-ic7-series-powers-wasaline-hybrid-electric-ropax-ferry/
https://www.danfoss.com/en/service-and-support/case-stories/dds/psw-and-danfoss-flexible-onshore-power-for-berthed-cruise-ships/
https://www.danfoss.com/en/about-danfoss/news/cf/danfoss-delivers-hundreds-ac-drives-to-wartsila-smart-technology-hub/

Classified as Public

We have done microgrid for years – what is different now?



Off-grid grid-forming

Important characteristics

- Island operation
- High fault current injection (STCI)
- Cold start of grid
- DOL motor and transformer connections
- Voltage harmonics mitigation

Simulation models

- Not required

On-grid grid-forming

Important characteristics

- Increased system strength
- Voltage angle jumps
- Fault ride through (FRT)
- Synthetic inertia incl. overload
- Virtual Synchronous Generator
- Oscillation damping
- + standard grid code functionality

Simulation models – EMT & RMS

- PSCAD, PSS/E, DigSilent PowerFactory



iC7-Hybrid have the needed capabilities for on-grid and off-grid applications

Synthetic inertia – new revenue stream

Market shifting from Fast Frequency Response (FFR) to dedicated inertia spot market:

- Germany went live with “Momentanreserve” in beginning of 2026.
- UK has in Stability Pathfinder program offered contracts for BESS and synchronous condensers providing inertia provisions.
- Continental Europe is still lacking a market for inertial response, however, the Requirements for Grid Connection (RfG) 2.0 is expected to include requirements for inertial response.
- In Australia inertial response is considered a core capability and a de facto requirement. Revenue stream is indirect through other grid services
- ERCOT / CAISO in USA does not have direct inertia product yet, indirect through fast frequency response

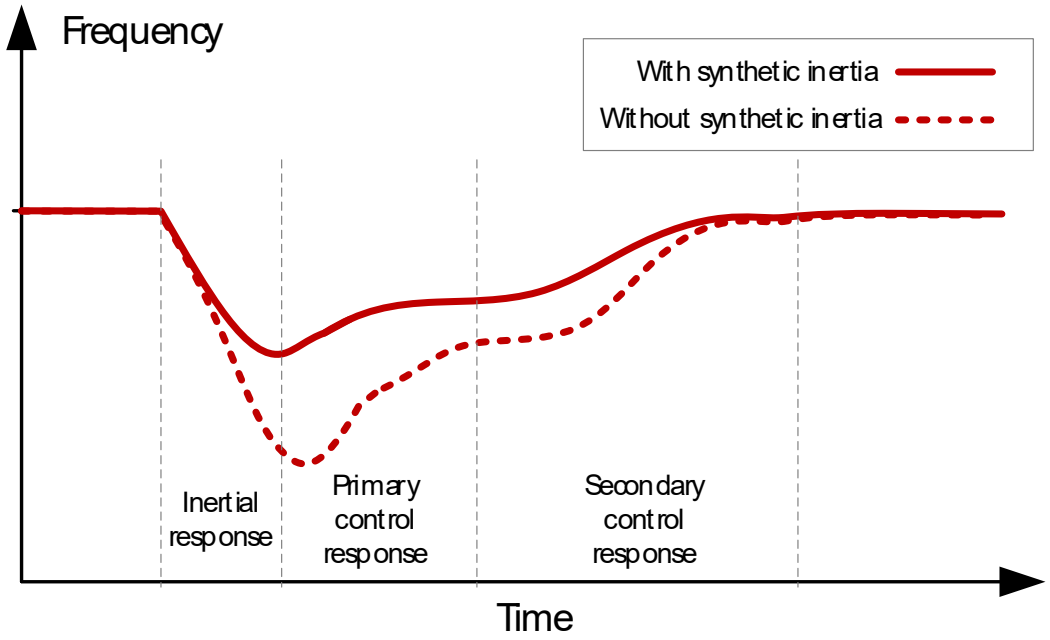

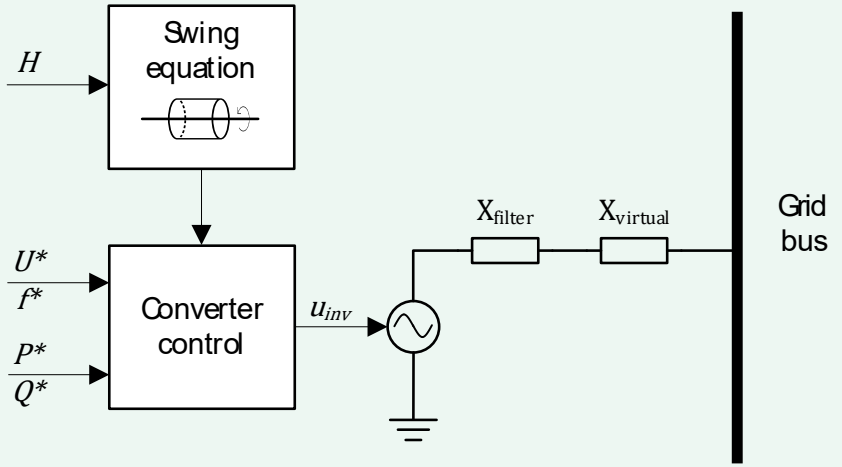

- Implements *swing equation* to mimic the inertial response of the rotating mass in generators
- Provides inherent and instant response to changes in grid frequency, often called ROCOF events, by injecting active power
- Inertial response is parameterized as time constant in seconds, typically 0.5 – 6 s
- Over capability need to be considered when sizing

Classified as Public

iC7-Hybrid operating modes

Grid-forming operating modes

GFM Droop control (w/ base load)
- P-droop
- Q-droop

GFM Power control
- P-control
- Q-droop / Q-control

GFM Inertia
- P-droop with inertia / P-control with inertia
- Q-droop / Q-control

Grid-following operating modes

GFL Power control
- P-control / Q-control

Not for usage with grid codes

GFM Island
- Isochronous mode (fixed voltage and frequency)

GFL DC Link Voltage (AFE)
- DC-link voltage control / Q-control

GFL DC Link Current/Power
- DC-link power control / Q-control

Compliance of iC7-Hybrid grid-forming

Grid operators around the world are publishing specifications on required functionality and testing methods. Testing is primarily done through simulations in tools like PSCAD, PSS/E and DigSilent PowerFactory.

iC7-Hybrid has been verified to pass Australian AEMO and Fingrid requirements.

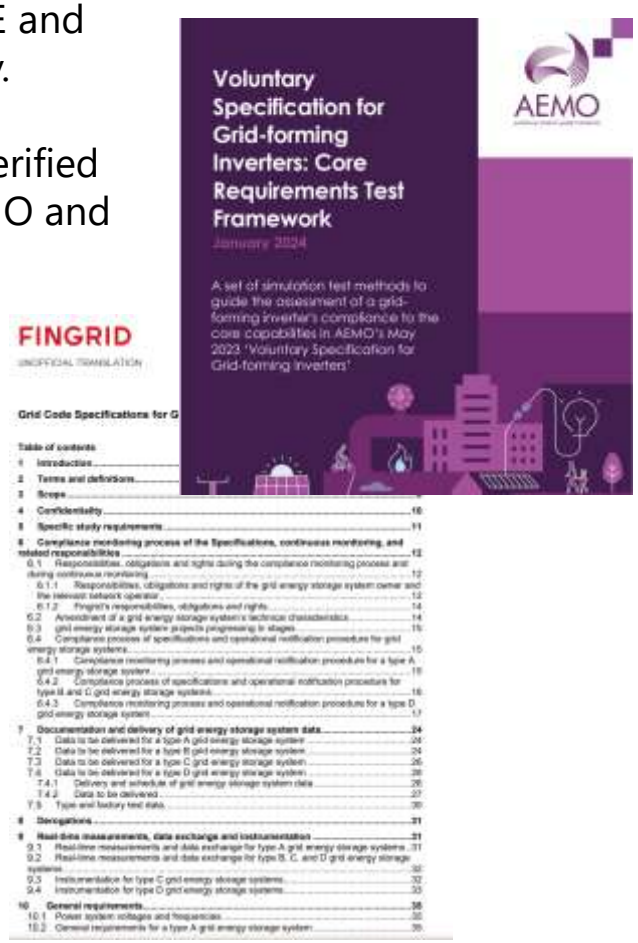

AEMO Voluntary specification for Grid-forming inverters

Test name	Testbench	Simulation result*
Loss of synchronous machine – discharging	2	✓
Loss of synchronous machine – charging	2	✓
Loss of synchronous machine – limits	2	✓
Loss of synchronous machine – power balance	2	✓
RoCoF up and down	1	✓
SCR ramp down with fault (10 / 3 / 2 / 1.5 / 1.25)	1	✓ / ✓ / ✓ / ✓ / ✓
Angle step change (±10 deg / ±30 deg / ±60 deg)	1	✓ / ✓ / ✓

FINGRID SJV2024

Test name	Testbench	Simulation result*
Loss of synchronous machine – discharging up	2	✓
Loss of synchronous machine – discharging down	2	✓
Loss of synchronous machine – charging	2	✓
2-phase with no fault resistance	1	✓
2-phase with no fault resistance and with earth contact	1	✓
1-phase earth fault with no fault resistance	1	✓
Performance of constant voltage control	1	✓
Angle step change (±30 deg)	1	✓

*Danfoss internal simulation verifications

Classified as Public

Which simulation models are used for compliance studies?

RMS (Positive-Sequence, Phasor) Models

Required for **steady-state and long-term dynamic studies.**

Delivered in **PSS®E** or **DIgSILENT PowerFactory** format.

- Active power control loop
- Reactive power / voltage control
- Frequency response (droop, LFSM-O/U, FSM)
- Protection functions (UV, OV, UF, OF trips)

EMT (Electromagnetic Transient) Models

Required when **short-term dynamics or fast controls matter**.

Delivered in **PSCAD™, PowerFactory** or **Simulink**.

- Detailed Converter Model (usec level)
  - Functional mock-up unit (FMU)
- Full switching-level or averaged EMT representation of controls.
- Same studies as RMS but mostly used for validation
- Stability studies

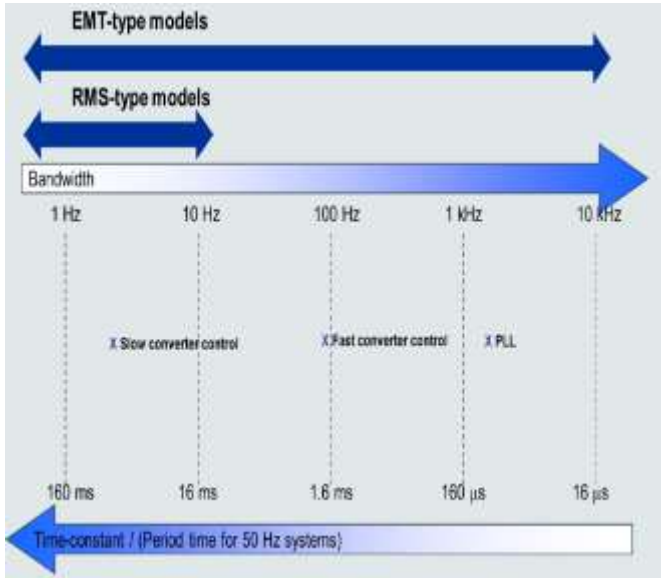

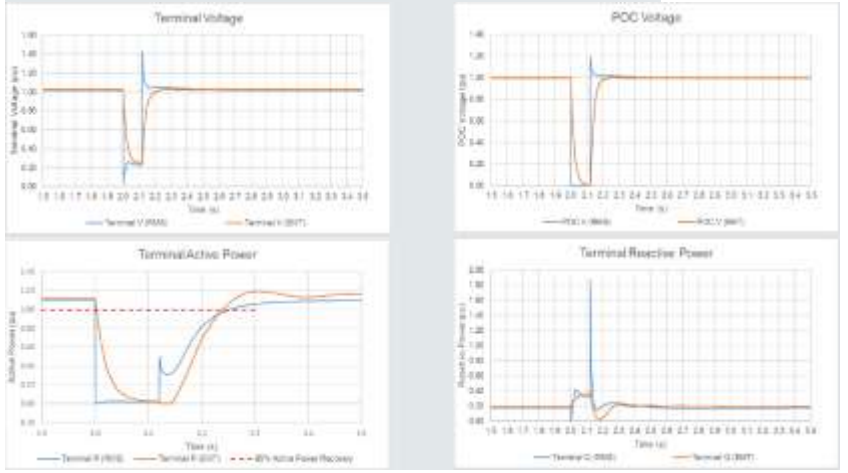

* Badrzadeh, Babak et.al. (2022). CIGRE Technical Brochure 881: Electromagnetic transient simulation models for large-scale system impact studies in power systems having a high penetration of inverter-connected generation.

Classified as Public

Powering the future of agribusiness with sustainable microgrid solutions

AUSTRALIA: In the semi-arid inland climate of the Riverina Region of New South Wales, where irrigation is essential to farming, the operator of Cadell Orchards faced a significant energy challenge. In its off-grid operation spanning 1,690 hectares, the Sunraysia almond orchard sustains more than 500,000 almond trees. However, its irrigation system was initially powered by diesel generators — an unsustainable approach with uncertain long-term energy cost.





The new system significantly reduces reliance on diesel by using a battery energy storage system to create a utility grade network and support a 4.9 MW tracking solar farm. The microgrid backbone consists of a 4.0 MVA/4.2 MWh battery energy storage system based on a Danfoss power converter and a PowerTec PaDECS® distributed microgrid edge control system.

Key to this solution are the PowerTec PowerCache® battery energy storage systems (BESS) power converters, comprising 4.0 MVA VACON® NXP Grid Converter units from Danfoss, which enable:

- Grid-forming strength to establish a stable microgrid
- High current overload capability to clear fault currents
- Instantaneous reserves to respond to load changes

Classified as Public

PSW created a compact container-based OPS solution using iC7-Hybrid



In the spring of 2023, Norwegian PSW – Power and Automation AS paired up with Danfoss to create new OPS solutions in three Nordic harbors: Stockholm, Ålesund and Haugesund/Karmsund. The goal was to develop a compact and modular system, that could provide a flexible solution to meet the requirements and blend into the busy harbor landscape. 100+ iC7-Hybrid grid converter units are installed in the harbors of Stockholm, Ålesund, and Haugesund.

The modular design also addressed the diverse needs of Haugesund/Karmsund. The harbor requested a modular system with the flexibility to connect a wider range of vessels besides cruise ships. The PSW solution supplies cruise ships, RoRo vessels, navy vessels, offshore/supply ships, "Hurtigruten" and explorer ships. Voltage levels available are 400–440-690–6.6 -11 kV and power range 800 kVA, 1600 kVA, 4 MVA and 16 MVA.





Scale of the three installations:

- 16 MVA at Haugesund /Karmsund
- 24 MVA at Ports of Stockholm (16+8 MVA)
- 32 MVA at Ålesund (16+16 MVA)

Classified as Public

Bringing clean drinking water to rural Kenya with 100% renewable resources

KENYA: Nestled just east of Nairobi is Kitui, the capital city of Kitui County in Africa. The drought-stricken region faces regularly high temperatures — and the Kitui community, like many others, lacks clean drinking water and the infrastructure to support it. That is, until Finland-based Solar Water Solutions, a frontrunner in renewable-powered water desalination technology, brought their proprietary modular reverse osmosis system to them.





The containerized and decentralized SolarRO water purification units from Solar Water Solutions are designed to operate in remote locations with renewable energy — and entirely without energy storage or a stable grid. Based on reverse osmosis, the SolarRO system also features SWS's patented Adaptive Nozzle Valve System (ANVS®) that maintains consistent pressure with the lowest energy consumption of all RO systems. SWS has long used the versatile Danfoss APP high-pressure pumps that enable the SolarRO system to run at varying speeds with high accuracy. For Kitui, SWS and Danfoss took the solution to the next level, codeveloping a new electrical infrastructure using the VACON® 100 X drives with Solar Pump application as the driving force behind the system.

Classified as Public

Key takeaways





AEMO Voluntary specification for Grid-forming inverters

Test name	Testbench	Simulation result*
Loss of synchronous machine – discharging	2	✓
Loss of synchronous machine – charging	2	✓
Loss of synchronous machine – limits	2	✓
Loss of synchronous machine – power balance	2	✓
RoCoF up and down	1	✓
SCR ramp down with fault (10 / 3 / 2 / 1.5 / 1.25)	1	✓/✓/✓/✓/✓
Angle step change (±10 deg / ±30 deg / ±60 deg)	1	✓/✓/✓

FINGRID SJV2024

Test name	Testbench	Simulation result*
Loss of synchronous machine – discharging up	2	✓
Loss of synchronous machine – discharging down	2	✓
Loss of synchronous machine – charging	2	✓
2-phase with no fault resistance	1	✓
2-phase with no fault resistance and with earth contact	1	✓
1-phase earth fault with no fault resistance	1	✓
Performance of constant voltage control	1	✓
Angle step change (±30 deg)	1	✓

*Danfoss internal simulation verifications

- Grid-forming requirements differ by country and grid operator
  - Grid-forming requirements are in addition to existing grid code requirements
  - Some TSOs require explicit inertia response
  - Others TSOs focus on voltage forming, fault current, or islanding capability
  - Finland is requiring grid-forming capabilites for class C & D (> 10 MW)

- Synthetic inertia - a new revenue stream
  - In some countries it is possible to monetize on synthetic inertia
  - Synthetic inertia needs to be considered when sizing inverter

- Simulation models
  - Required and need to be submitted early in project
  - Missing or non-conforming models can delay whole project
  - Customers: ”Simulation models are 40% of the risk with projects”

Classified as Public


Danfoss