Finland 2026 Symposium on Microgrids

15-18 June 2026, Lappeenranta-Tampere



LUT University

Organized by: Laboratory of Electricity Markets and Power Systems (LEMPS), LUT School of Energy Systems

With support from: Tampere University, Vaasan yliopisto

INTERNATIONAL Microgrid SYMPOSIUMS

ABB

INNOVATION IN DISTRIBUTION PROTECTION AND CONTROL AS AN ENABLER FOR NEW SMART GRID FUNCTIONALITIES

Anna Kulmala, R&D Principal Engineer, ABB Distribution Solutions

ENGINEERED TO OUTRUN

© 2026 ABB. All rights reserved.

Contents

- Energy transition and the role of electrification
- Examples of new innovative solutions
  - Monitoring and control for renewables
  - Virtualized centralized protection
- From research to large-scale business-as-usual deployments
- Conclusions

© 2026 ABB. All rights reserved.

Energy system in transition

Several significant, interlinked global development drivers affecting the energy system simultaneously

Climate change continues to require immediate actions.

Geopolitical situation means a paradigm change for the whole energy system and will accelerate the green transition but also means real challenges.

Renewable generation (wind, solar) the least cost alternative for new electricity production. Intermittent and often distributed.

Load behaviour is changing due to e.g. electric vehicles, heat pumps, and prosumer behavioural changes.

Energy storages are already economically feasible.

Digital technologies enable cost-efficient implementation of new smart grid functionalities.



Energy system in transition

Need for innovation higher than ever

To reach the **sustainability** goals the following needs to happen very fast:

- Fully carbon-neutral energy
- Electrification of society

But we cannot compromise on **reliability** and **affordability** either.

In many countries e.g. grid congestion is already an everyday reality.

⇒ New solutions are needed fast.

⇒ The energy system is becoming more complex and dynamic than ever before.

⇒ New business opportunities and roles will arise.

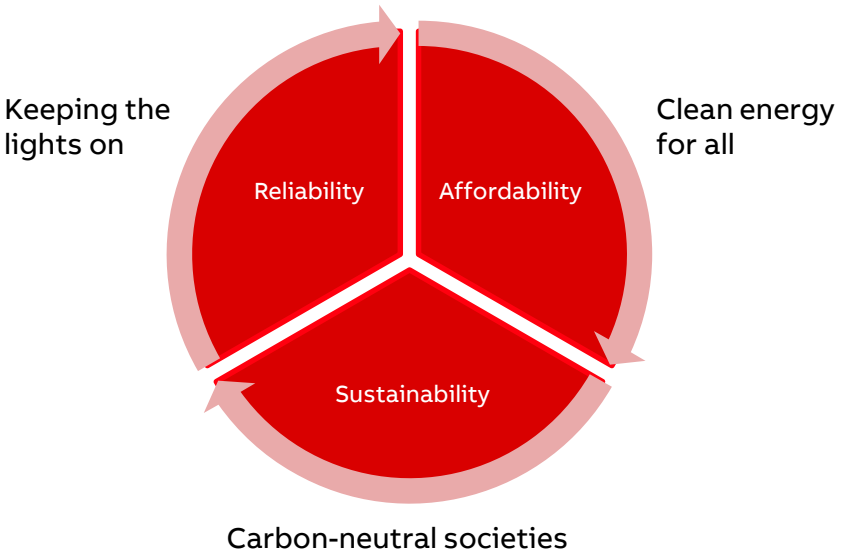

Monitoring and control for renewables

- “All in one” solution to control renewable power generation sites
- Collects measurement data, controls individual resources and communicates with external systems

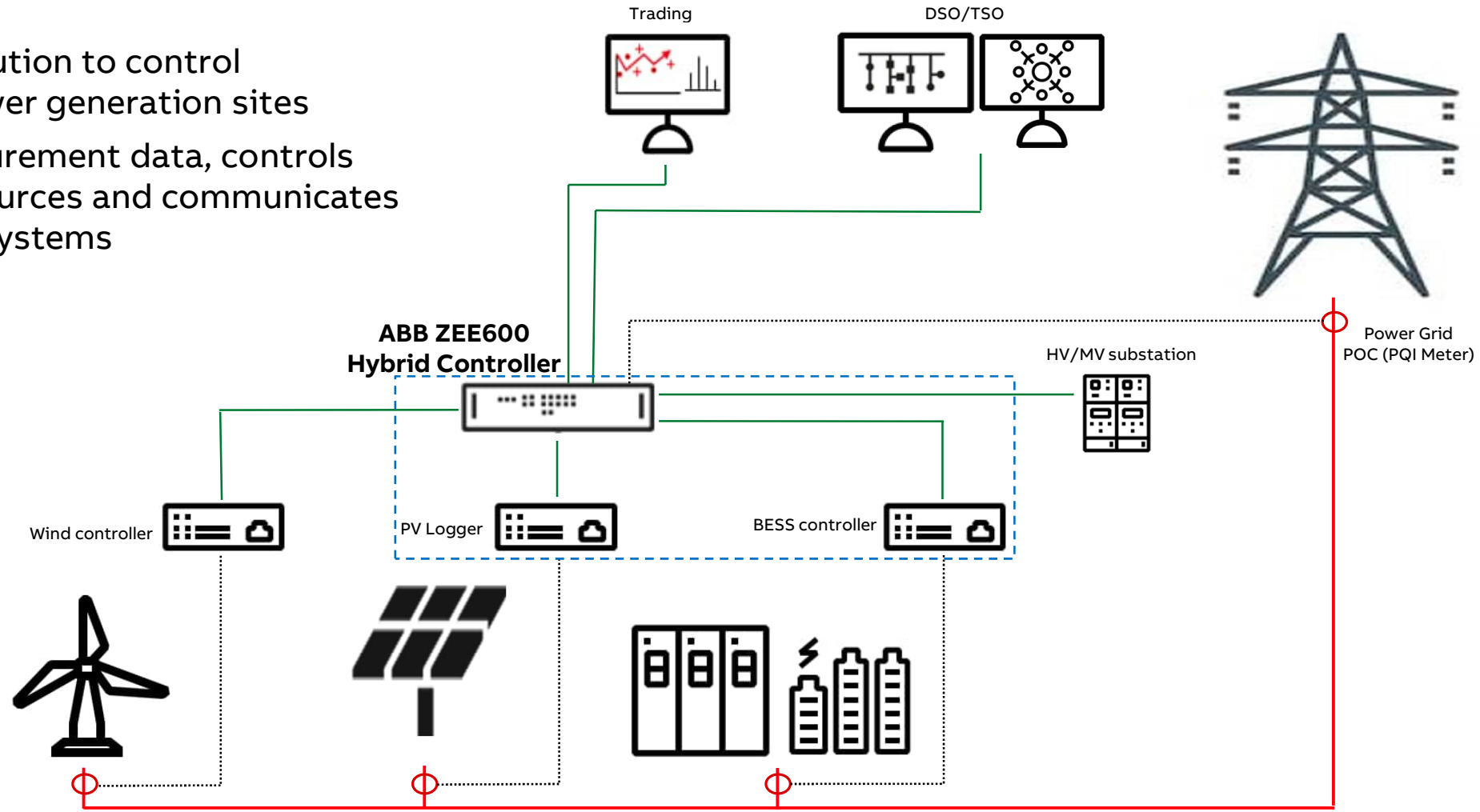

©ABB

ABB ZEE600 Hybrid Controller

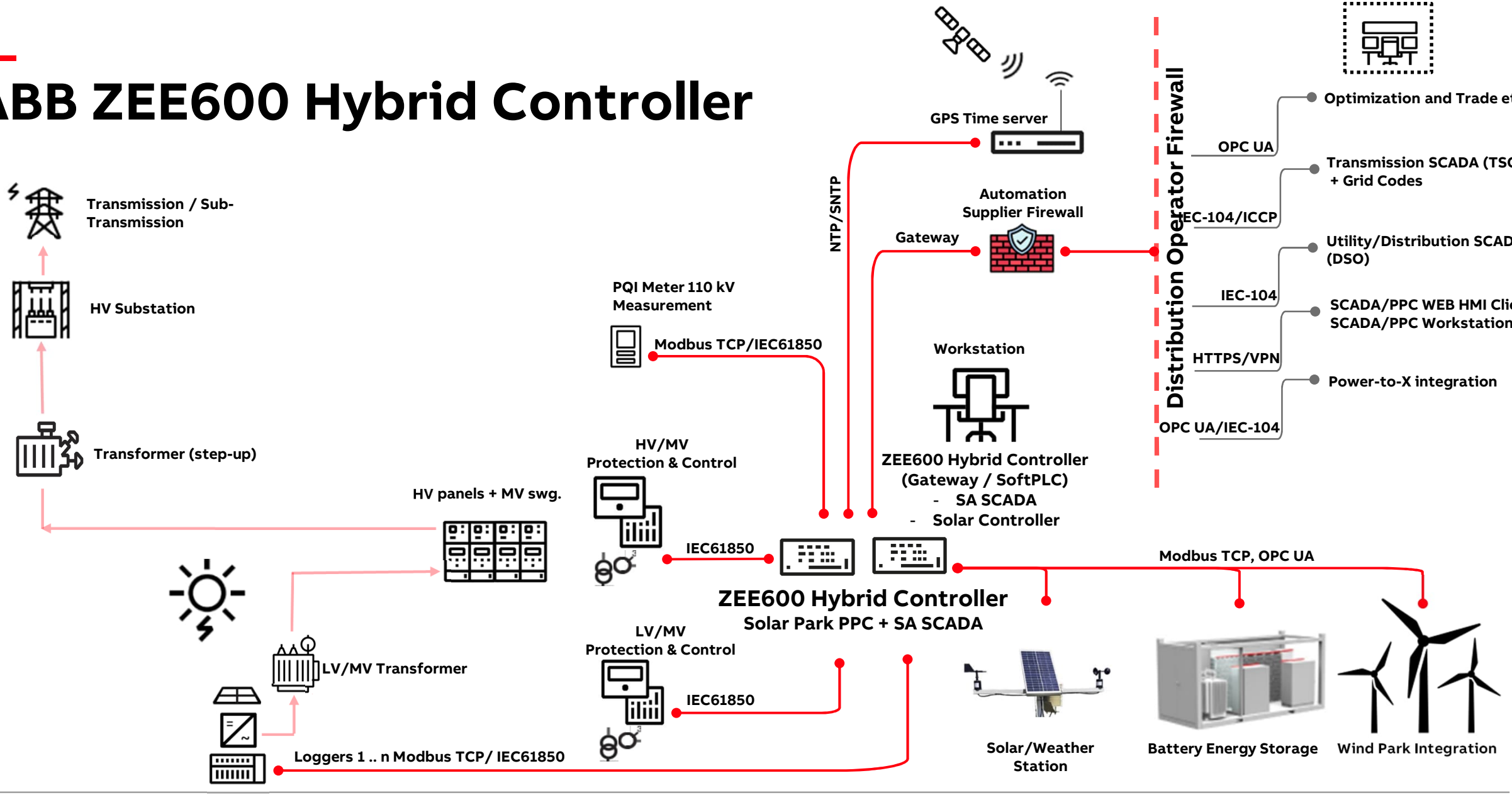

Solar Parks
References

Heinineva

- 100 MWp
- 140 000 panels
- Commissioning phase, fully in production 2026

Utajärvi

- 102,5 MWp
- 170 000 panels
- Delivery 2025-2026, In production 2026

Hallanvahti

- 129 MWp
- 206 000 panels
- Delivery 2025, In production 2026

Lohja

- 10 MWp
- 18 000 panels
- Delivery 2024-2025, In production 2025

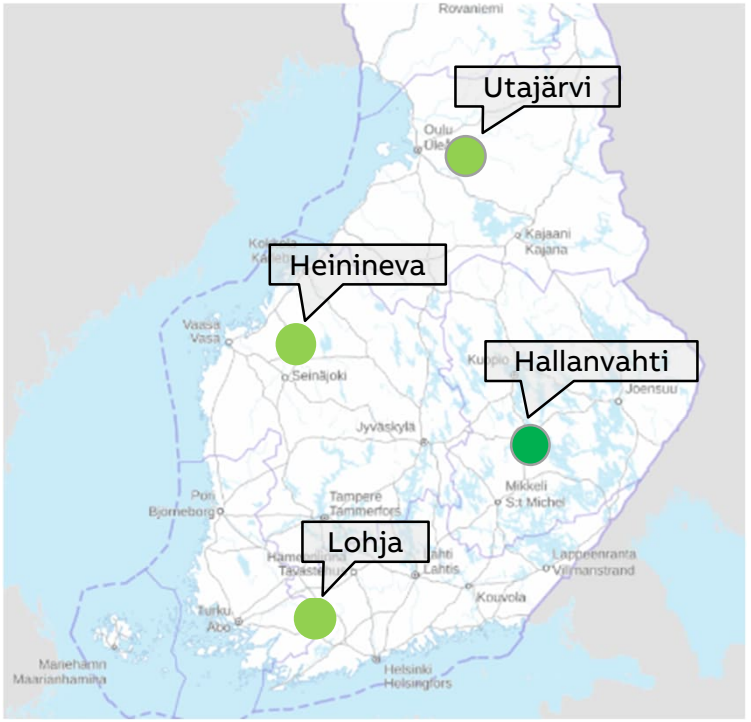

©ABB

Virtualized centralized protection and control

Individual protection devices

- The business-as-usual solution

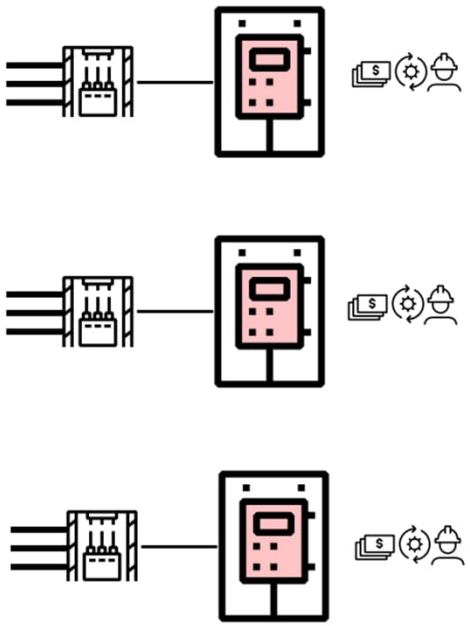

Centralized protection and control

- Visibility towards the whole substation → more advanced functionality
- Less protection devices to be maintained

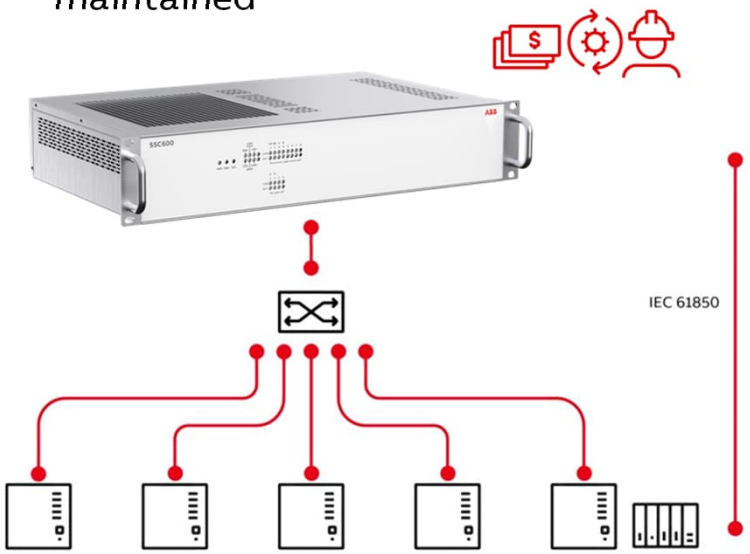

Virtualized protection and control

- Scaling multiple instances or applications on the same machine(s)
- Opportunity to combine engineering resources

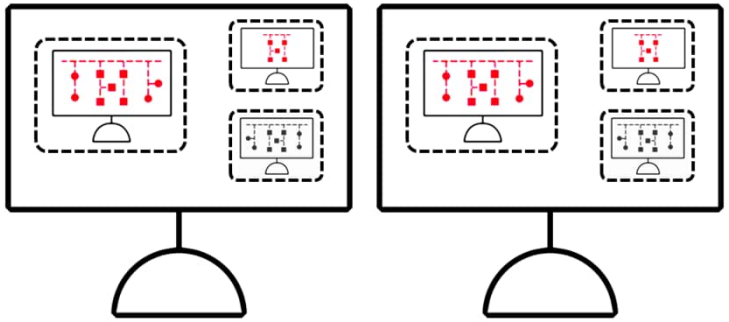

© 2026 ABB. All rights reserved.

Virtualized centralized protection

Constellation project

Setup:

- Substation computers host a virtualisation environment that enables deploying different applications (e.g., protection) on the same hardware.
- Protection functionality is implemented at site level in a centralised architecture.
- Intelligent electronic devices (IEDs) at each bay provide measurement and status data via IEC 61850-9-2 sampled values and IEC 61850-8-1 GOOSE messaging to the virtualised protection.
- The virtualised protection solution includes bay level protection functions and a wide-area protection functionality that uses communication between the distribution network substations and the DER sites.

Status:

- Piloting ongoing in two UK Power Networks's pilot areas
- Active operation starting
- BaU procedures under work

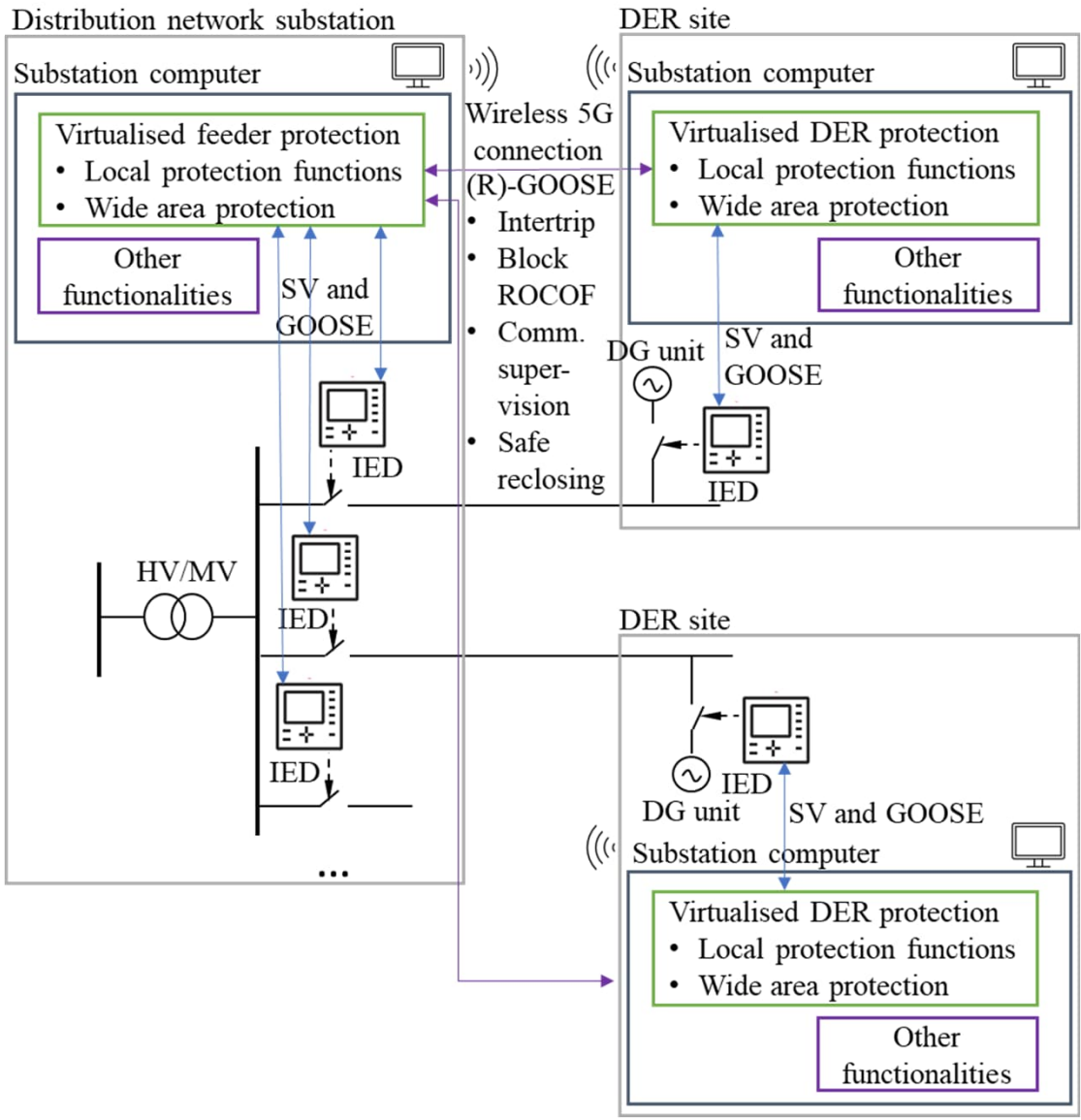

© 2026 ABB. All rights reserved.

Remote virtualized centralized protection

HEDGE-IoT pilot

Setup:

- Protection functionality of two primary substations and several feeder breakers is combined to one virtualized centralized protection unit located in the DSO's server room
- Advanced fiber network utilising MPLS technology is used to transmit IEC 61850 sampled values and GOOSE
- Time synchronization is provided from centralized (master) network clocks

Status:

- Piloting ongoing in two Järvi-Suomen Energia's substation areas
- Remote protection operating in passive mode to enable comparing operation of the remote centralized protection and local IEDs

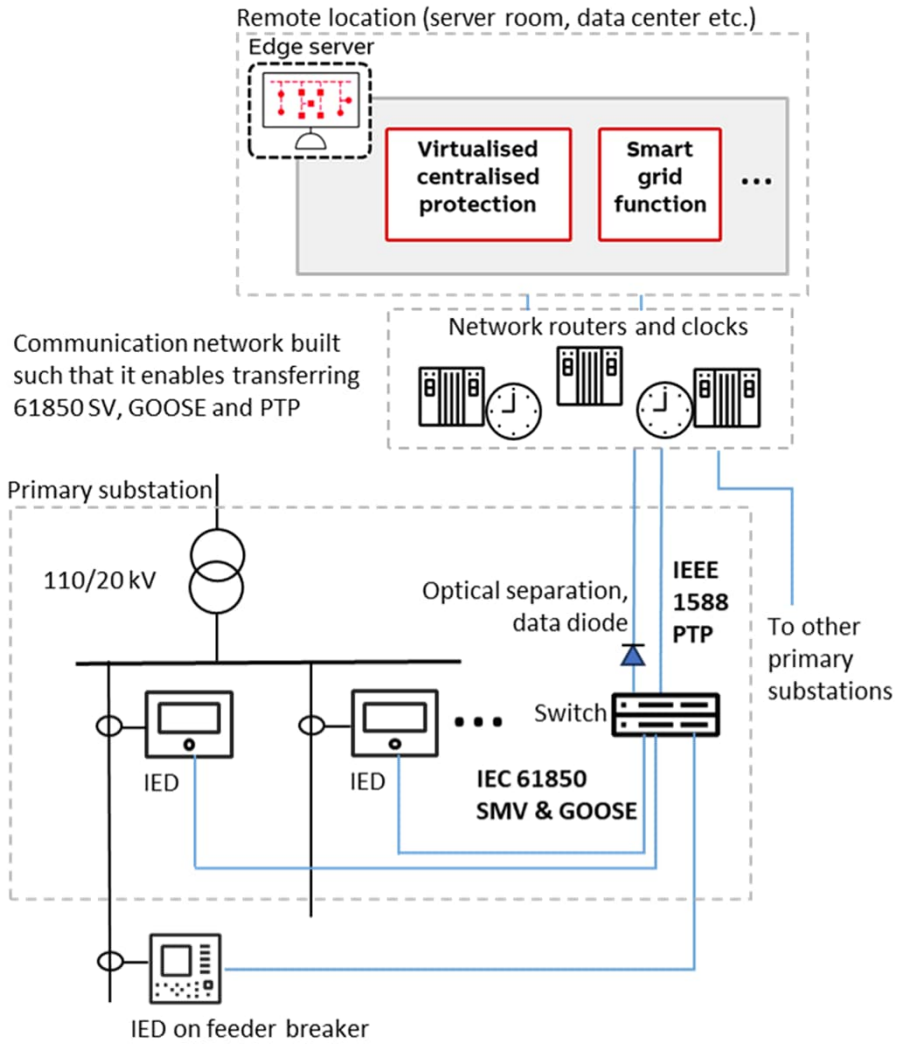

© 2026 ABB. All rights reserved.

From research to large-scale business-as-usual deployments

Important aspects to consider when taking new technology into use:

- Pilot projects provide concrete proof on the benefits of the new technology and information on practical aspects of deploying these kinds of solutions
    - During pilot projects extensive laboratory testing is usually conducted prior to site installations
    - More simplified testing procedure can be used in business-as-usual deployments once the solution is fully de-risked
- New technology requires new skills from the workforce and changes in mindset
    - Training of personnel is mandatory and, in many cases, setting up training labs is a good idea
    - Risks need to be mitigated but an innovative mindset is key
- Business case needs to exist, total cost of ownership should be considered
- System operator processes need to be developed to support the transition
    - Engineering standards and documents need to be written
    - Testing and maintenance of the new systems need to be defined
- Technology development is not usually the barrier

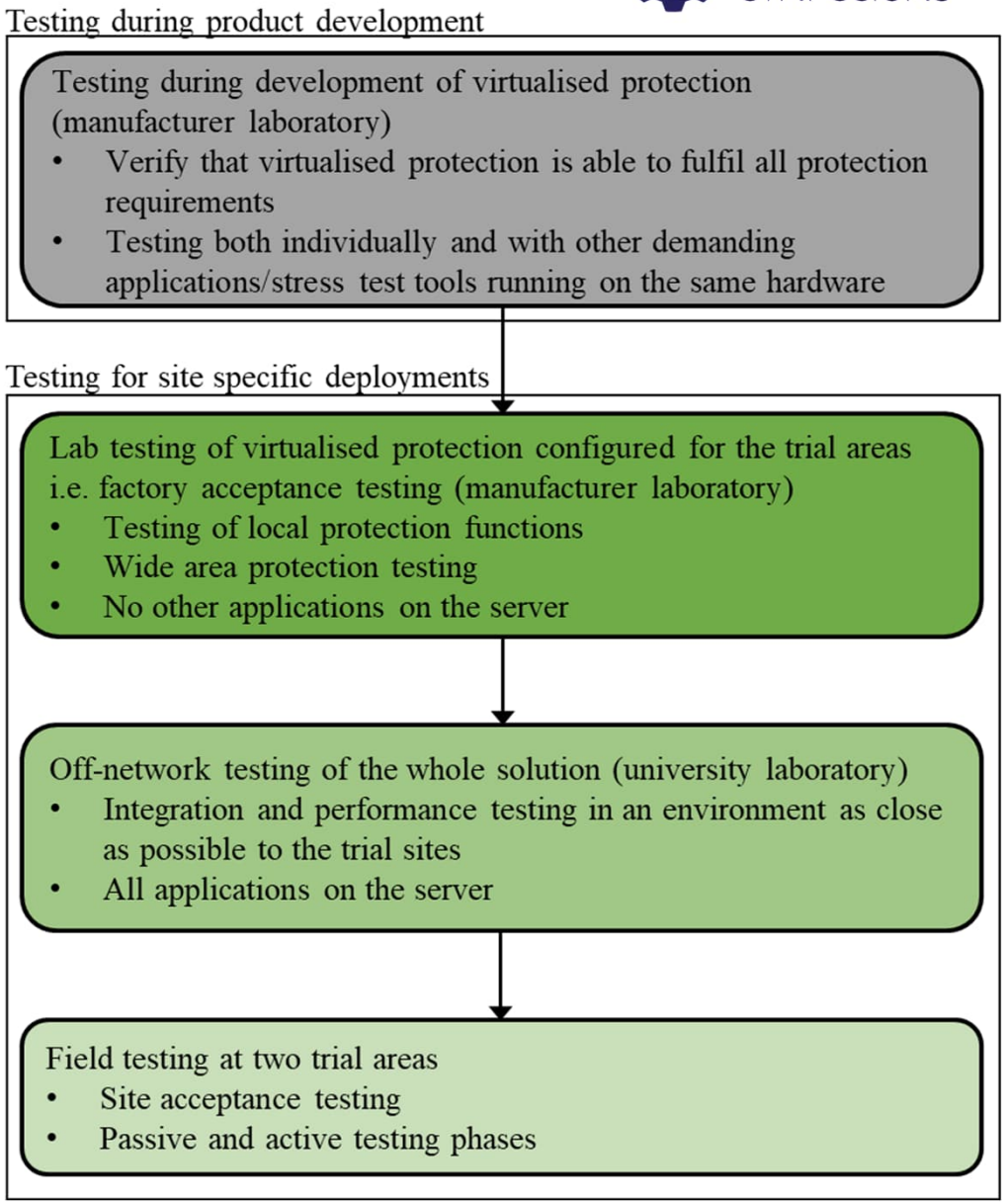

© 2026 ABB. All rights reserved.

Conclusions

- Energy transition is happening now and new solutions that enable sustainable, reliable and cost-efficient energy system are urgently needed
- Innovation collaboration between different stakeholders (device manufacturers, system operators, research organizations, regulators etc.) is required more than ever
- Pilot projects are important but it is even more important to find ways to move from pilots to large-scale deployments of the solutions



© 2026 ABB. All rights reserved.

