Developing novel control strategies ensuring cybersecurity : A Literature Gap Map, Methodology, and Validation

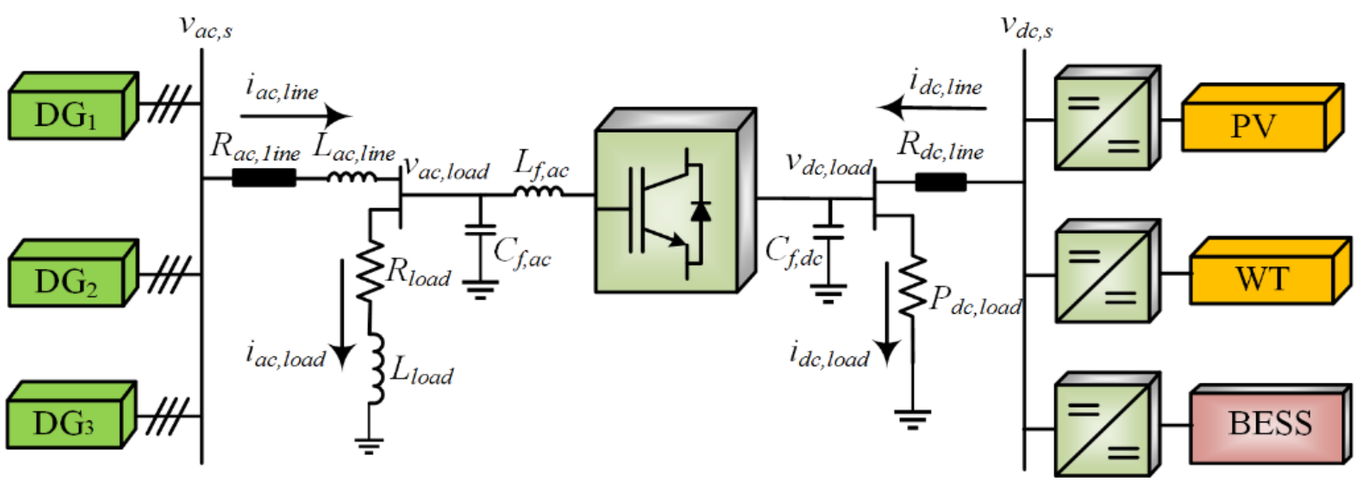

Figure 1. Proposed microgrid architecture.

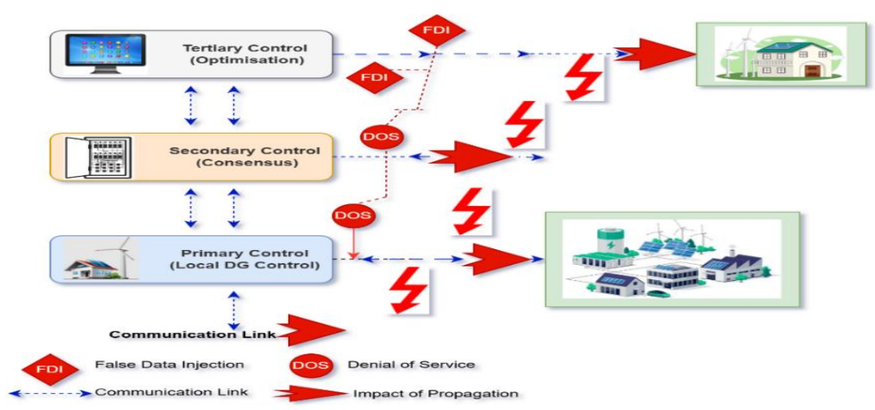

Figure 2. Cyberattacks and vulnerable points.

Introduction

Microgrids are the most important technologies in the contemporary smart grid infrastructures, consisting of renewable energy (RE), energy storage systems (ESS), controllable loads, and a power electronic converters. *(See figure 1)*

The increasing digitization of microgrids, involving communication networks, expands the attack surface to cyber-attacks that can affect the system's control and stability, making system vulnerable to cyberattacks (FDI, DoS, replay attacks etc.) *(See figure 2)*. Numerous control methods have been devised, but they cannot guarantee stable operation when the communication and control signals are compromised by cyber-attacks, multi-vector attacks and complex attack models, communication disconnection, and severe disturbances. Such disturbances can create cascading effects in the system.

These challenges motivate the development of advanced cyber-resilient hierarchical control framework that ensures resilience against grid failures and cyber-attacks.

Gaps and Next Steps

Several papers and literature database were investigated to classify methodologies, validations, key contributions, limitations, and identify the gaps primarily *(See figure 3)*.

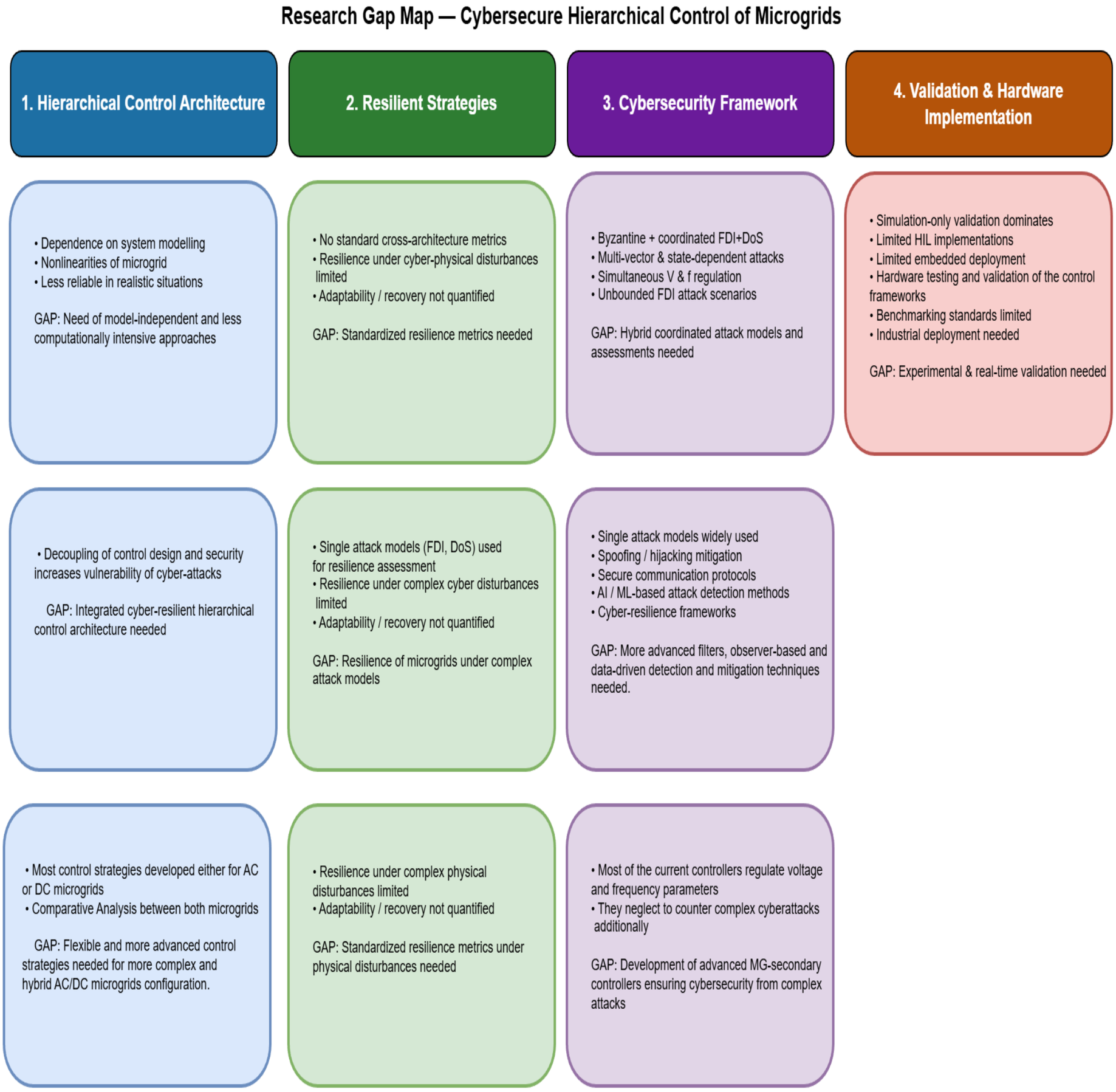

Figure 3. Research gap map.

References

1 Vasilakis et al., "The evolution of research in microgrids control," 2020.
2 Shafiee et al., "Microgrids: Dynamic Modeling, Stability and Control ," 2023
3 Gutiérrez-Escalona et al., "Artificial intelligence in the hierarchical control of AC, DC, and hybrid AC/DC microgrids: a review," 2024.
4 Phani Swecha Tadepalli et al., "Cyber-resilient strategy for dc microgrids against concurrent FDI and DOS attacks," 2025.
5 Arsalis et al., "Learning robust model predictive control for voltage control of islanded microgrid," 2025.

Project partners

National Technical University of Athens

PROTASIS engineering & consulting

Ideal4Green

Funded by the European Union

Arsalan Rehmat[1], Nikos Hatziargyriou[1], Aris Dimeas[1], Stefanos Dallas[2]

[1]National Technical University of Athens (NTUA), School of Electrical and Computer Engineering, Greece

[2]Protasis SA, Greece

Contact: arsalanrehmat@mail.ntua.gr

ΕΘΝΙΚΟ ΜΕΤΣΟΒΙΟ ΠΟΛΥΤΕΧΝΕΙΟ

NATIONAL TECHNICAL UNIVERSITY OF ATHENS (NTUA)