合肥工業大學
HEFEI UNIVERSITY OF TECHNOLOGY

INTERNATIONAL Microgrid SYMPOSIUMS

Fault Recovery Control for Hybrid AC/DC Microgrids Based on Seamless Mode Switching

Associate Prof. Meng, Xiaoxiao

Hefei University of Technology

Hefei, Anhui Province 230009 China

mxxfreedom@hfut.edu.cn

Introduction
Background of this Research

INTERNATIONAL Microgrid SYMPOSIUMS

More complex and diverse application scenarios have placed higher demands on the capacity and voltage levels of modern microgrids (MGs).



Military Camp MG



Island MG



Marine Oilfield MG



Industrial park MG

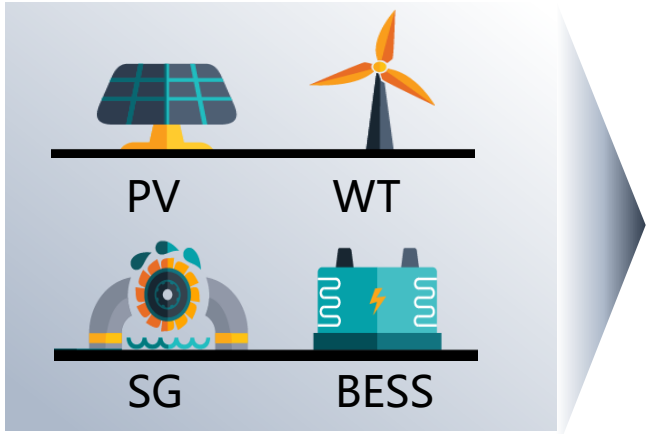

	Classic AC-MG	Modern MGs
Capacity	100kW Level	1MW Level
Voltage Classes	220V/380V	Multi-level 380V/10kV/35kV

合肥工業大學 HEFEI UNIVERSITY OF TECHNOLOGY

The rapid and extensive integration of renewable energy, EVs and IT loads in the distribution network has gradually expanded the application scenarios of Hybrid AC/DC MGs (HMGs).

Advantages
- Good compatibility
- Low initial cost
- Compatible with rotary machine

Disadvantages
- Complex control
- Low efficiency for DC sources/loads
- Power quality issue

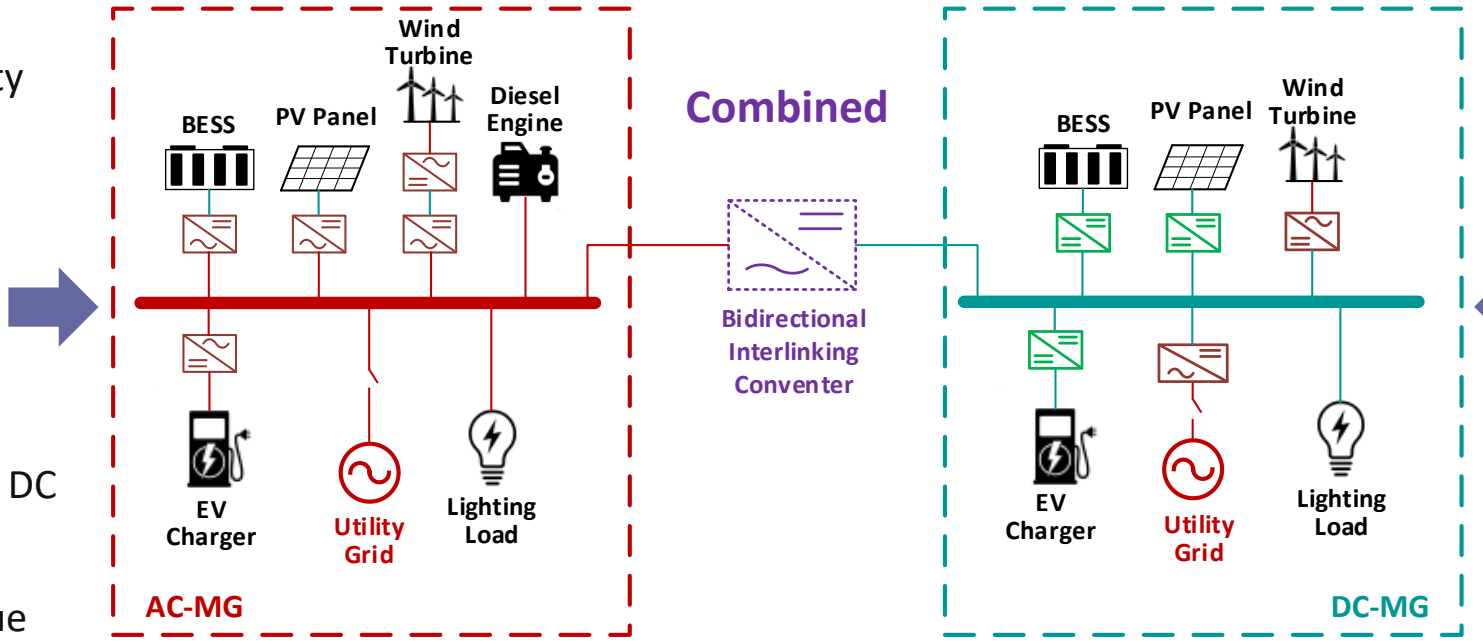

Typical Structure of Hybrid AC/DC MGs

Advantages
- Higher efficiency
- Simple Control
- Flexible voltage adaptation

Disadvantages
- Complex Protection Configuration
- Insufficient power supply standards
- Difficulties in voltage transformation

Currently, the architecture of HMGs is evolving from a single-MG structure toward the interconnection schemes via power electronic devices (PEDs) and multi-terminal DC (MTDC) system.

Stage One: Single HMGs

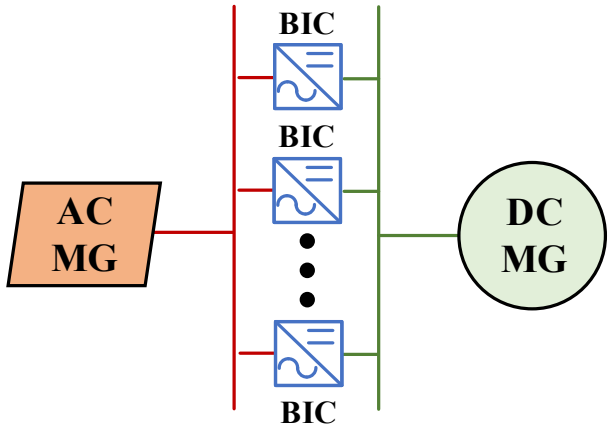

One or more BICs

Stage Two: HMGs interconnected by PEDs

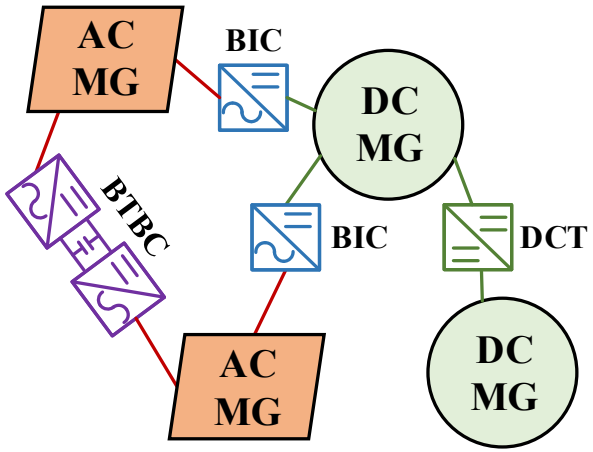

PEDs: BTBCs, BICs(VSCs) and DCT

Stage Three: HMGs with MTDC Interconnection

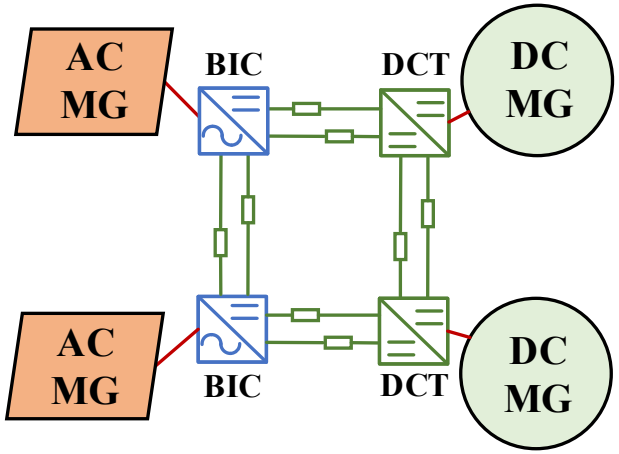

PEDs that forms a MTDC scheme

The MTDC-HMGs system consists of multiple AC-MGs and DC-MGs, and the flexibility of interconnection among these MGs is achieved through the MTDC system architecture.

	AC-MG Side	DC-MG Side
DGs	Grid-following Unit (GFLU) Grid-forming Unit (GFMU)	Dispatchable Source Unit (DSU) Non-dispatchable Source Unit (NSU)
PEDs	VSC (AC/DC, BIC)	DCT (DC/DC, DAB)

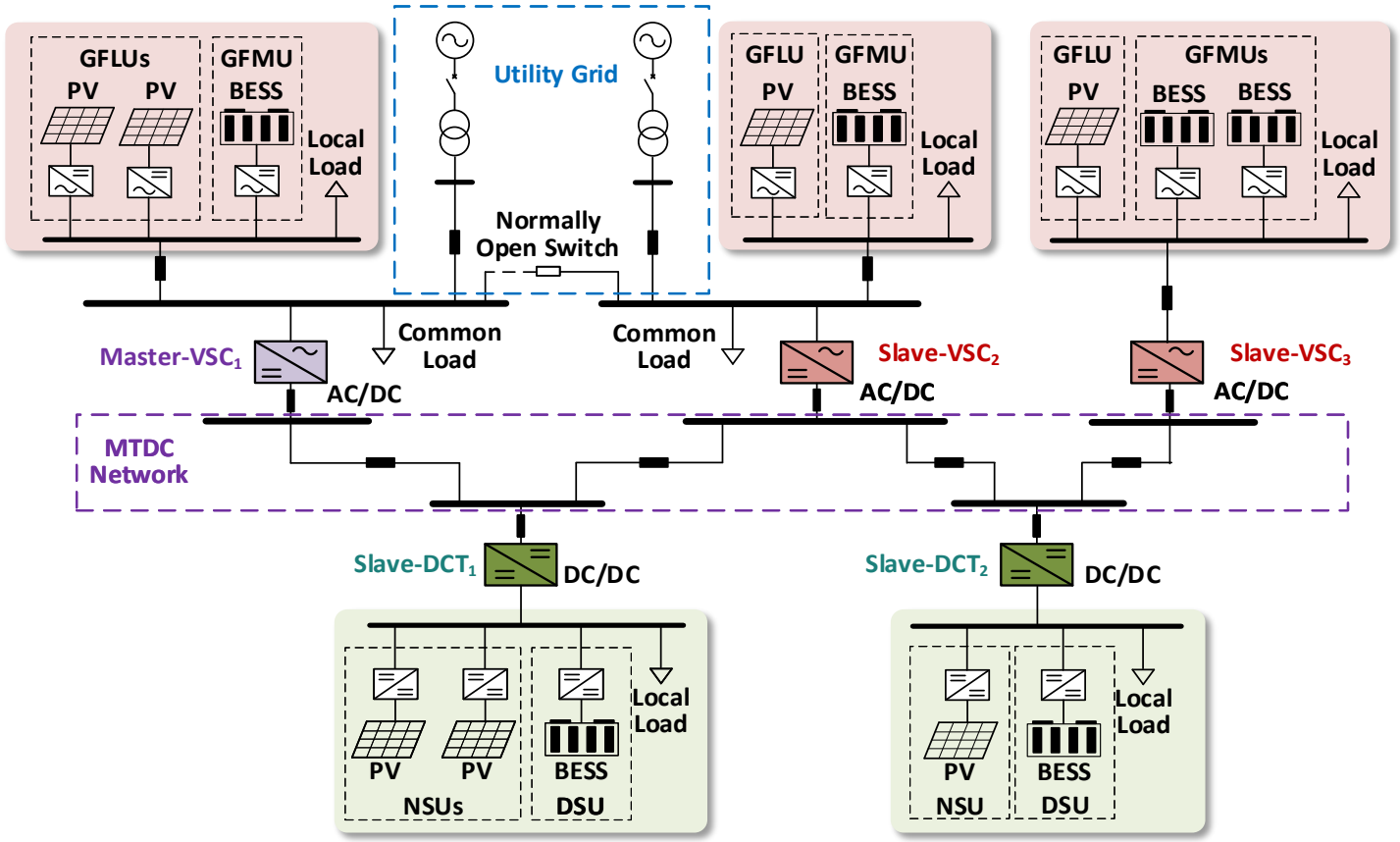

Topology of MTDC-HMGs

A hierarchical distributed secondary control (DSC) scheme is implemented for the MTDC-HMGs.

- **DSC Goals for PEDs**
  - Global power sharing management
- **Control Mode for PEDs**
  - Adopting Master-slave Control Mode
- **DSC Goals for MGs**
  - AC-MGs: Frequency & voltage restoration and power sharing management
  - DC-MGs: Voltage restoration and DC power sharing management
- **Primary Control for DGs**
  - GFMUs: P-f & Q-U droop Control
  - GFLUs: PQ Control or MPPT Control
  - DSUs: P-Vdc droop Control
  - NSUs: Constant P Control or MPPT Control

MTDC-Layer control

MG-Layer control

DG-Layer control

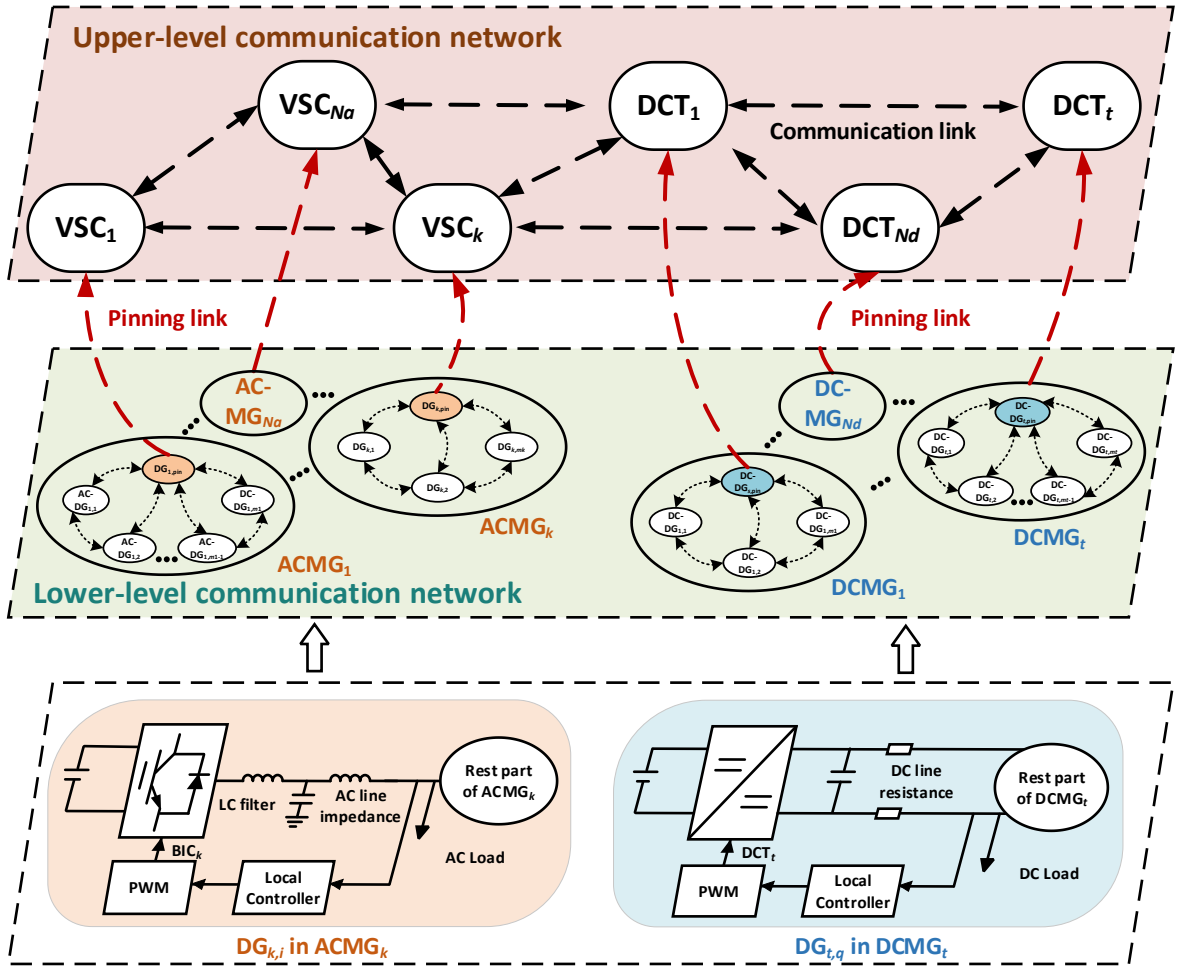

Multi-layer hierarchical DSC framework

DSC + Droop Control for GFMUs and PQ Control for GFLUs.

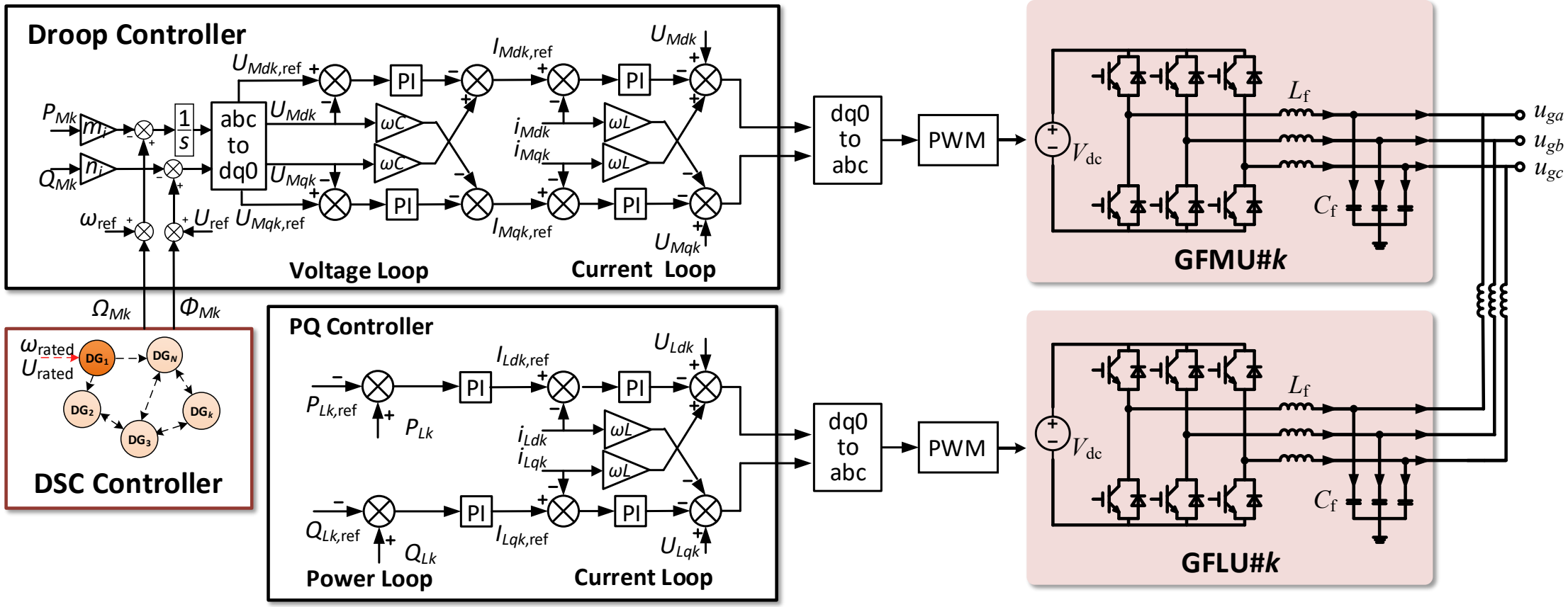

INTERNATIONAL Microgrid SYMPOSIUMS

DSC + DC Droop Control for DSUs and Constant P Control for NSUs.

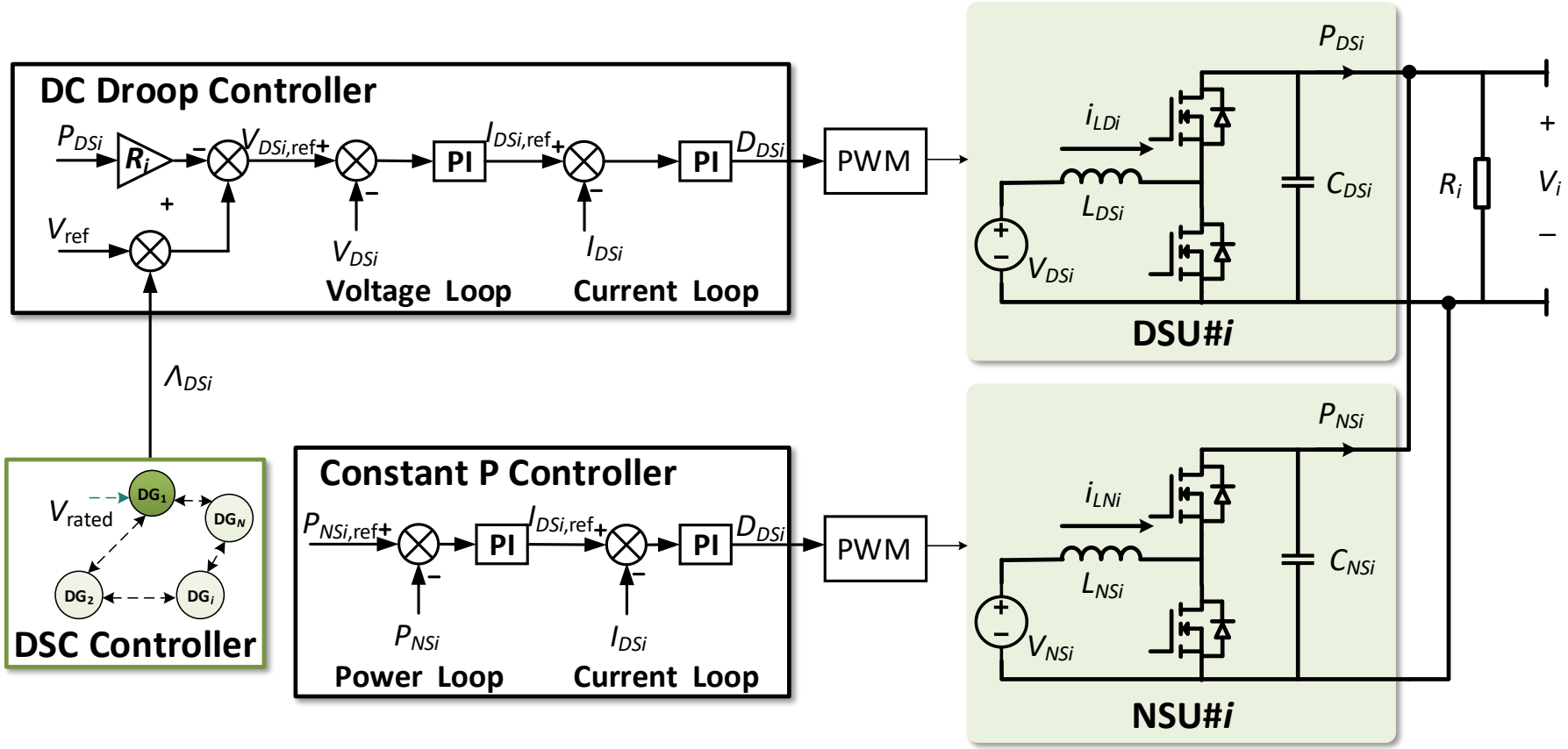

合肥工業大學 HEFEI UNIVERSITY OF TECHNOLOGY

- For the Master-slave Mode: 1) Master VSCs (VdcQ); 2) Slave VSCs (PQ +DSC); 3) Slave DCTs (Constant P +DSC).

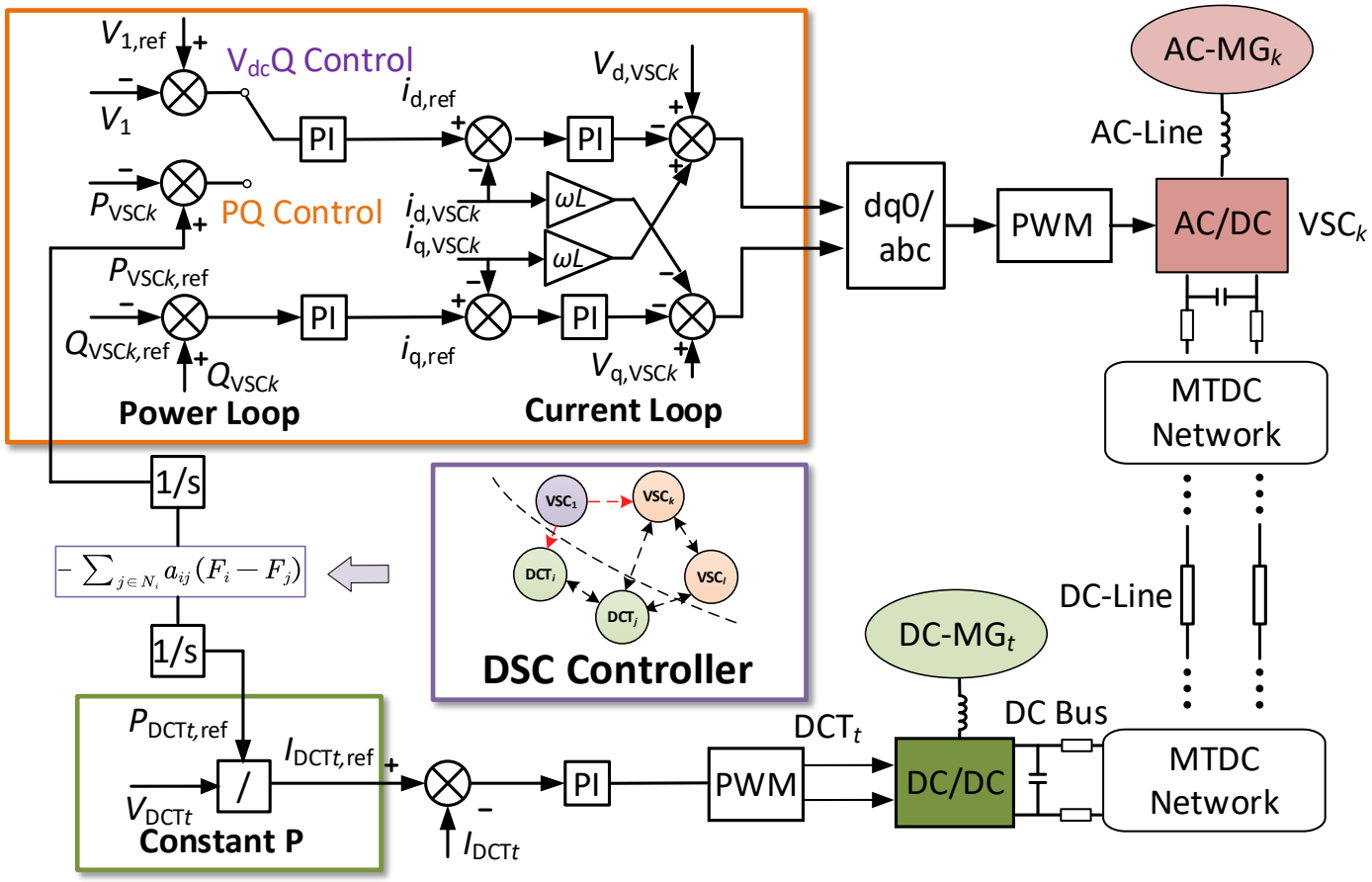

Seamless Mode Switching
Problem Description under Fault Condition

The common severe fault scenarios of the MTDC-HMGs can be summarized as follow,

- Scenario 1: fault at the common bus of AC-MG1.
- Scenario 2: fault at the common bus of AC-MG2.
- Scenario 3: fault at the bus of DC-MG1.

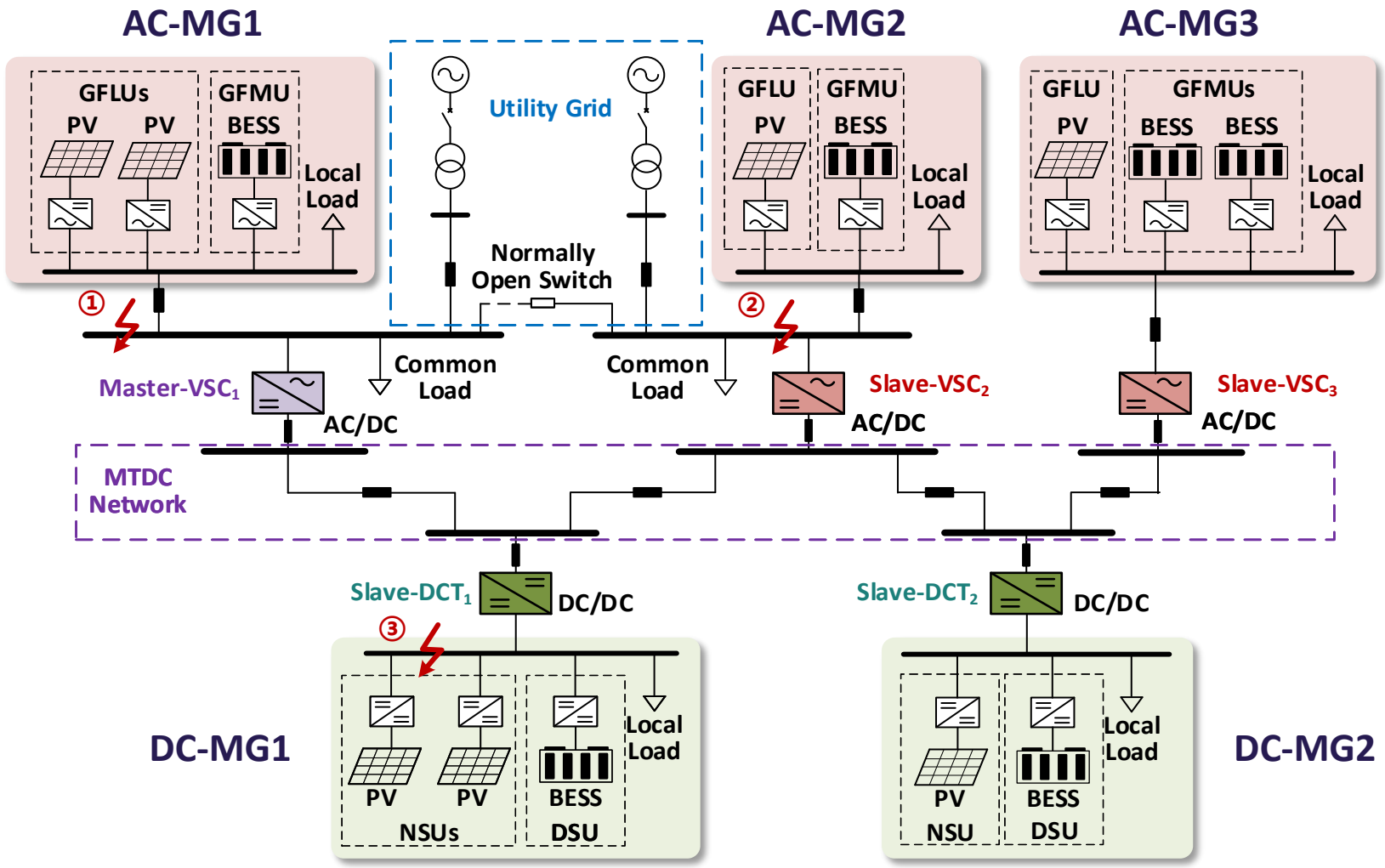

Seamless Mode Switching
Problem Description under Fault Condition

When a fault occur at MG bus side, there might encounter the three following challenges:

- How to achieve uninterrupted power supply in the faulty MG by utilizing the corresponded PEDs?
- How to ensure the safety and seamless switching of the control modes for PEDs?
- How to still maintain the global power sharing management among other normal AC/DC-MGs?

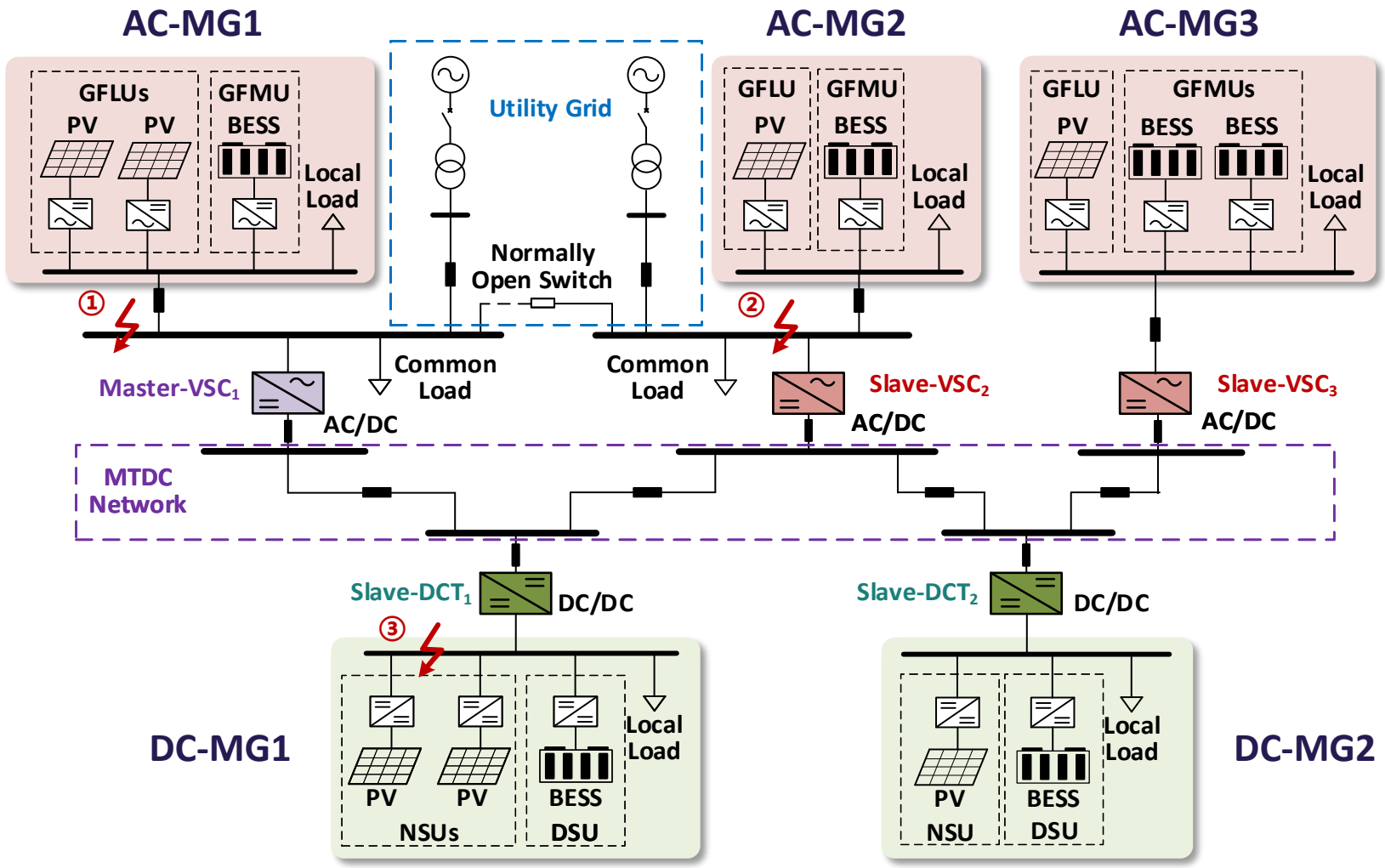

Seamless Mode Switching
Fault Recovery Process Analysis

Fault Scenario I

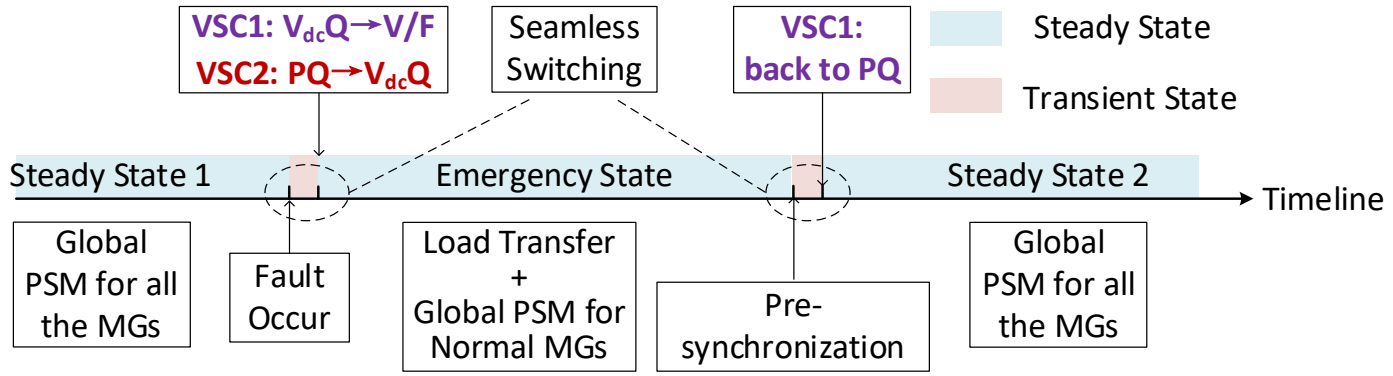

Fault Scenario II

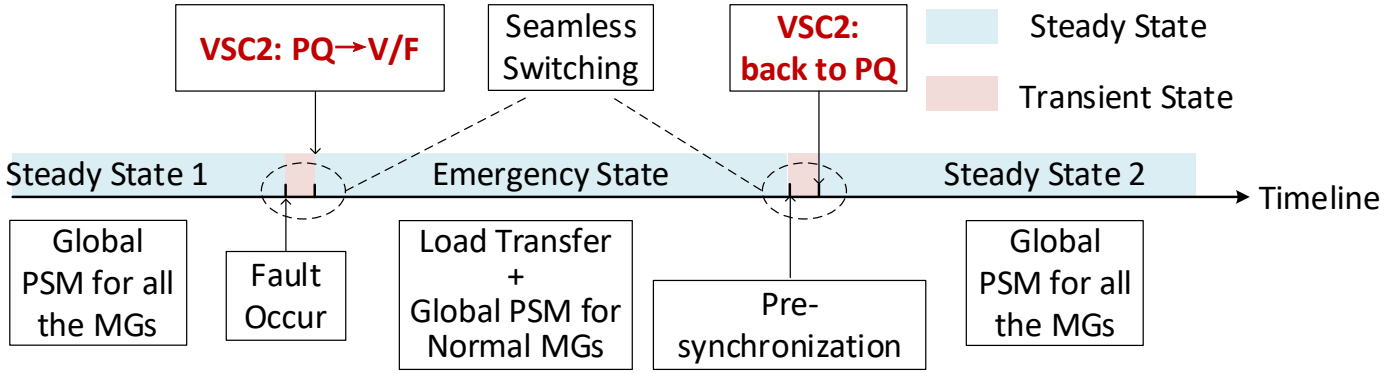

Seamless Mode Switching
Fault Recovery Process Analysis

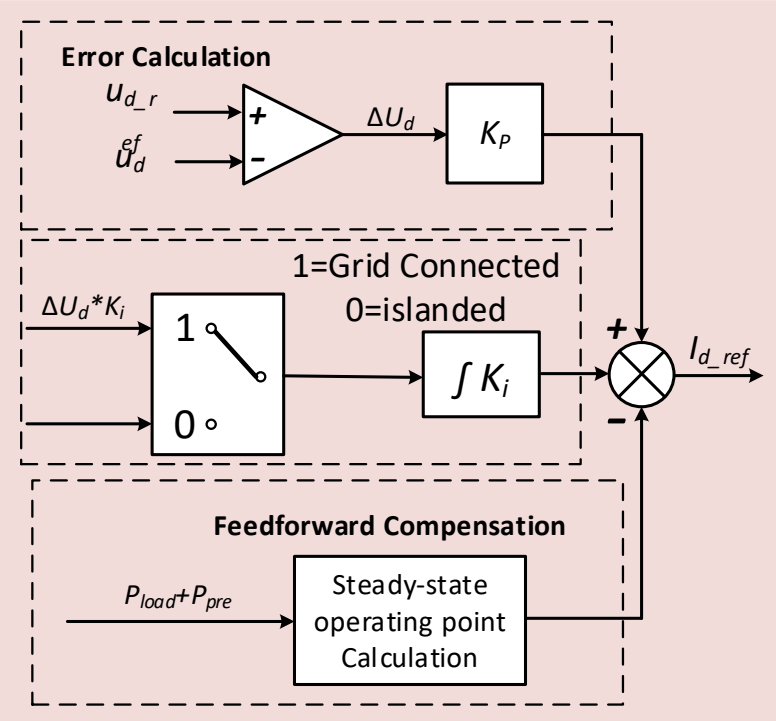

- Key point: Grid-side current as the feedforward compensation

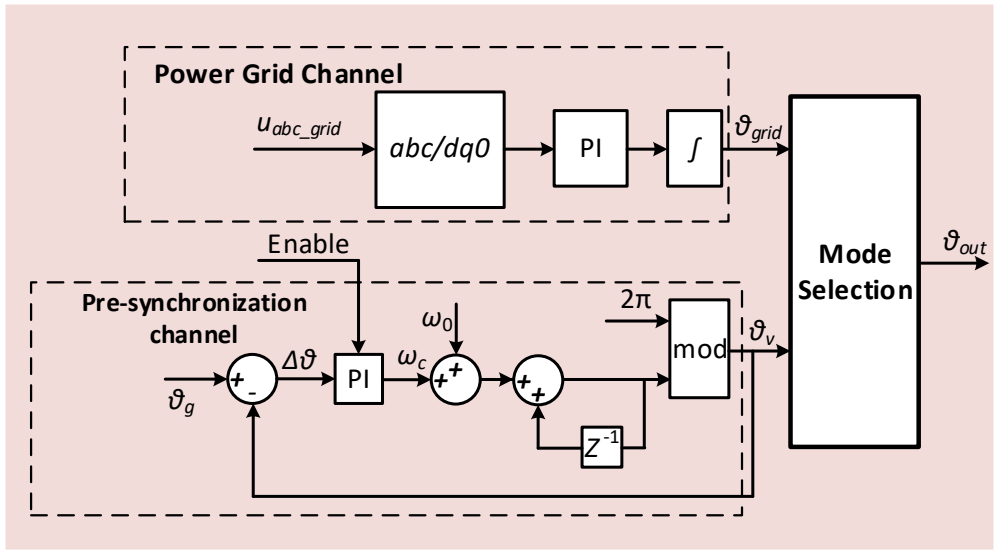

- Key point: Phase pre-synchronization control to reduce grid connection impact

Fault Scenario III

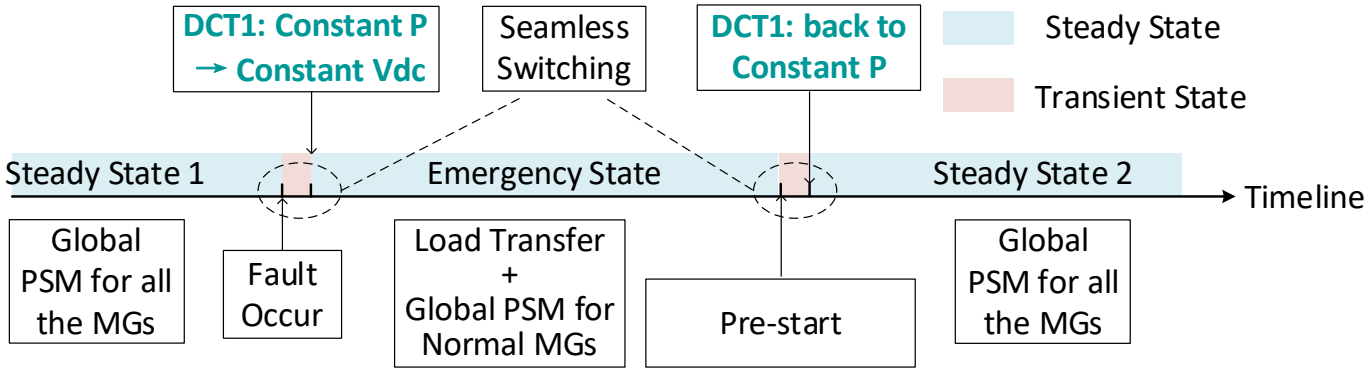

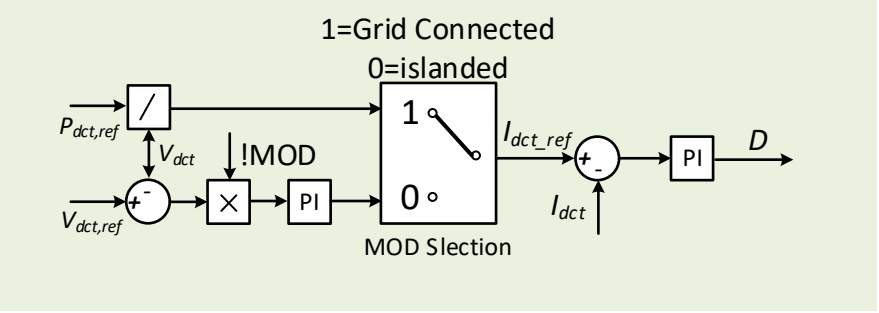

- **Key point: Pay attention to the reset of the integral circuit of the DC voltage control loop**

INTERNATIONAL Microgrid SYMPOSIUMS

- Seamless switching technique is implemented in practical cases in China.

Structure Diagram

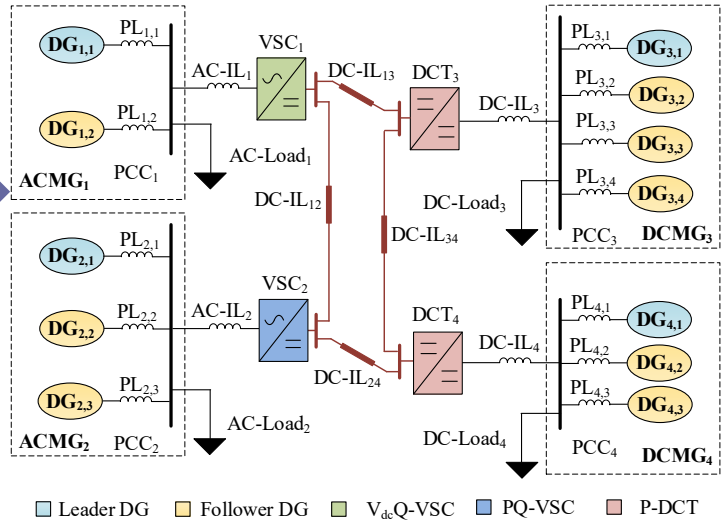

Communication Topology

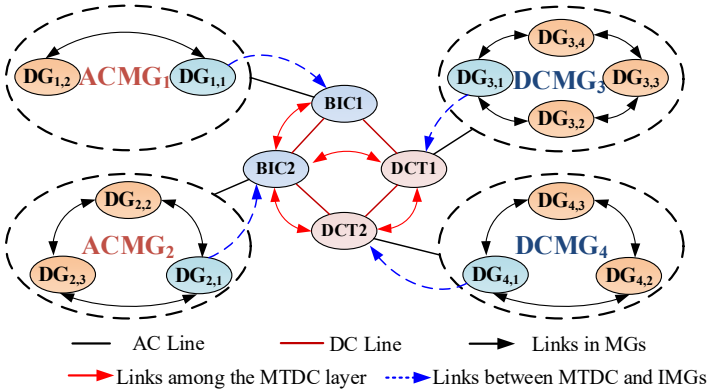

Parameters

DG Parameters	Magnitudes	
	$DG_{1,1\&1,2\&2,1\&2,2\&2,3}$	$DG_{3,1\&3,2\&3,3\&3,4\&4,1\&4,2\&4,3}$
RLC Filter	0.4Ω/5mH/10μF	0.02Ω/0.03mH/1000μF
Droop Controller K^P/K^Q	$5.2\times10^{-5}/0.8\times10^{-4}$	$1\times10^{-3}/2\times10^{-3}$
Secondary Controller $C_v/C_P/C_\omega$	30/20/20	10/1

BIC/DAB Parameters	Magnitudes	
	$BIC_{1\&2}$	$DAB_{3\&4}$
RLC Filter	0.1Ω/2.5 mH/100μF	0.15mH/880μF
DC Capacitor C_{dc}	1000 μF	1000 μF
Current Controller K_P/K_I	20/200	0.35/15
V_{dc} Controller K_P/K_I	2/20	/
PLL Controller K_P/K_I	0.4/2	/
Capacity	15 kVA	10 kVA

Load Parameters	Magnitudes			
	$Load_{1,1}$	$Load_{2,1}$	$Load_{3,1}$	$Load_{4,1}$
Load P_{Load}/Q_{Load}	32 kW 16 kvar	40 kW 20 kvar	14 kW	18 kW

AC-Line Parameters	Magnitudes		
	PL	$AC\text{-}IL_1$	$AC\text{-}IL_2$
AC Line R_c/L_c	0.8Ω/5 mH	0.1Ω/2.5 mH	0.15Ω/3 mH

DC-Line Parameters	Magnitudes			
	$DC\text{-}IL_{12}$	$DC\text{-}IL_{13}$	$DC\text{-}IL_{24}$	$DC\text{-}IL_{34}$
DC Line R_{Ldc}	0.03 Ω	0.04 Ω	0.06 Ω	0.02 Ω

合肥工業大學 HEFEI UNIVERSITY OF TECHNOLOGY

INTERNATIONAL Microgrid SYMPOSIUMS

- **Scenario I: A severe fault happens at AC-MG$_1$ Bus leads to the temporary shutdown of all the GFMUs.**

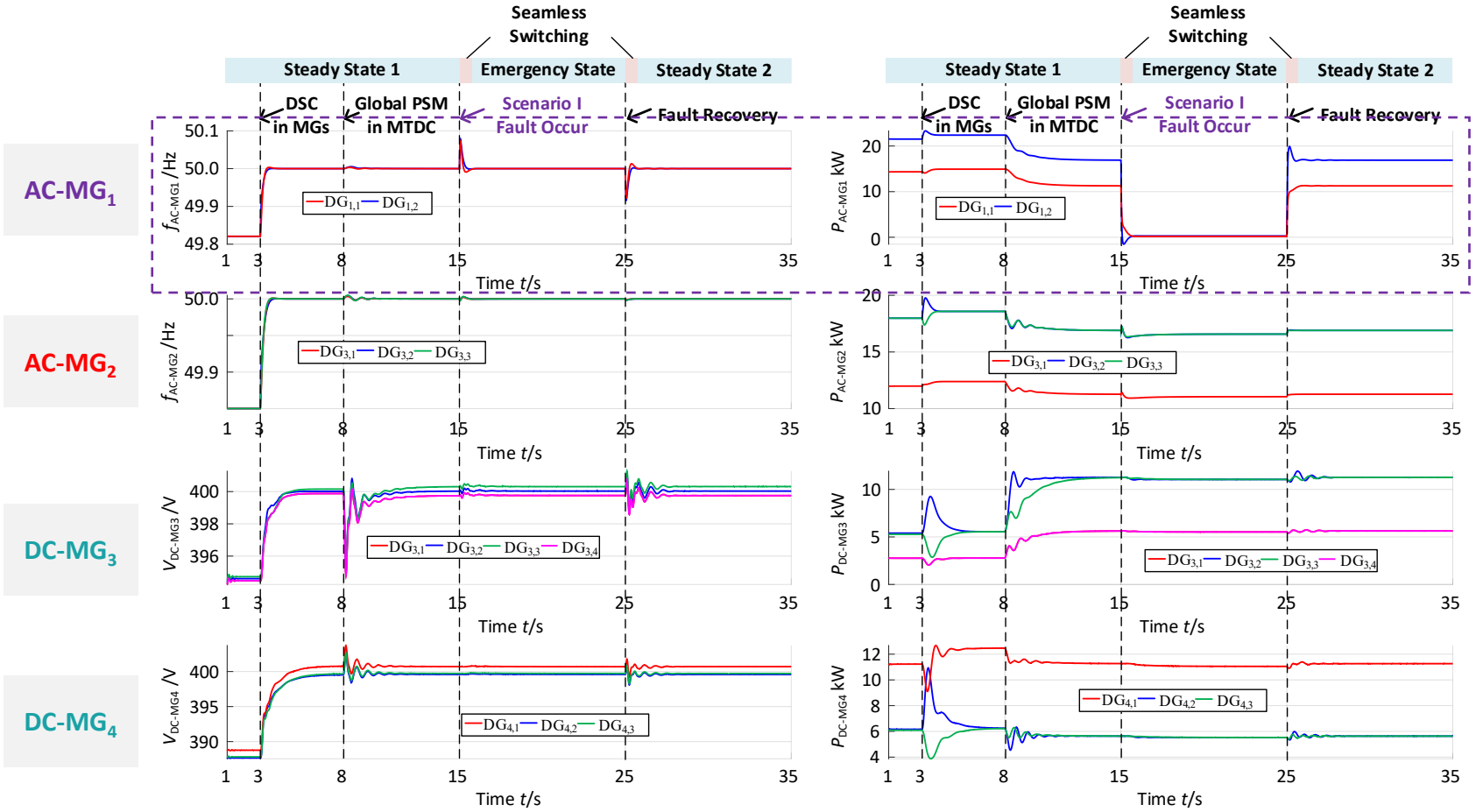

Global PSM for the MTDC-HMGs

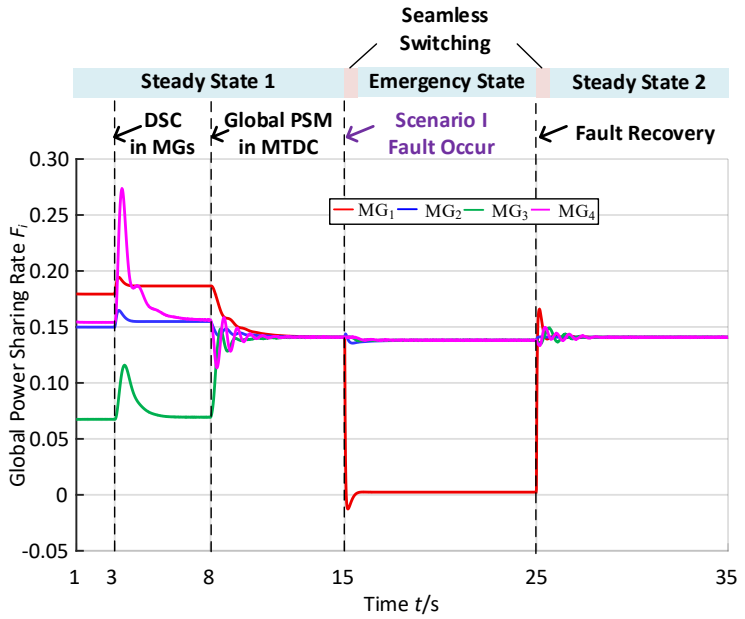

合肥工業大學 HEFEI UNIVERSITY OF TECHNOLOGY

INTERNATIONAL Microgrid SYMPOSIUMS

- Scenario II: A severe fault happens at AC-MG$_2$ Bus leads to the temporary shutdown of all the GFMUs.

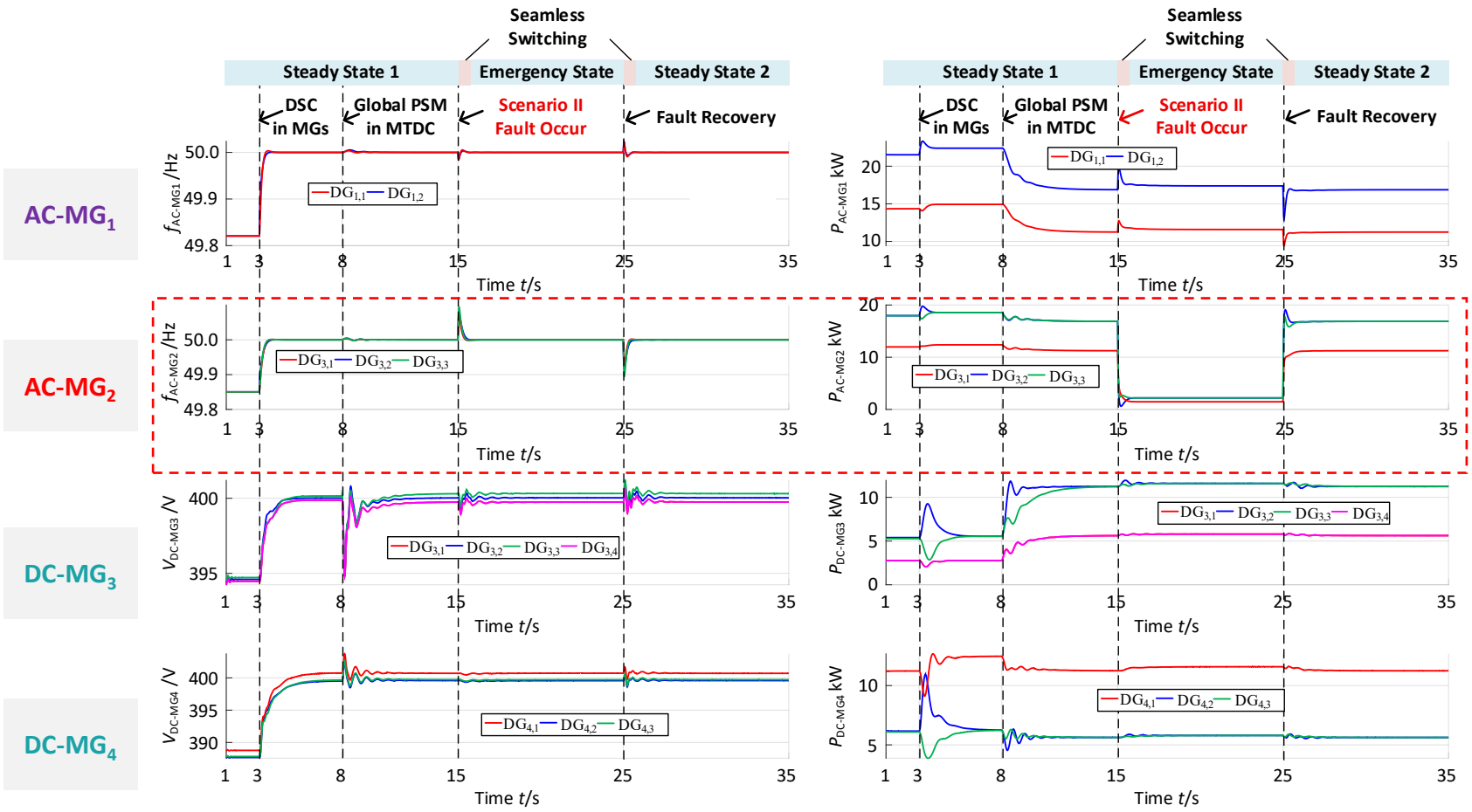

Global PSM for the MTDC-HMGs

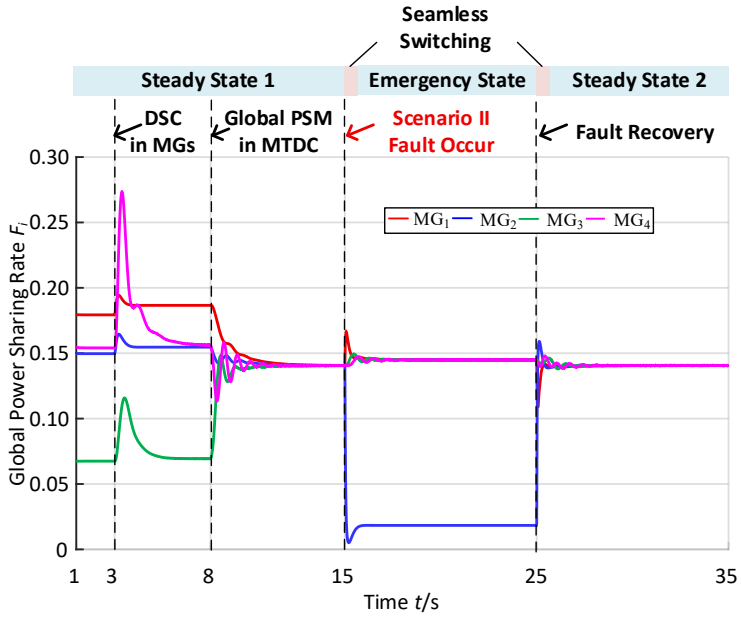

合肥工業大學 HEFEI UNIVERSITY OF TECHNOLOGY

INTERNATIONAL Microgrid SYMPOSIUMS

- Scenario III: A fault happens at DC-MG_3 Bus leads to the temporary shutdown of DSUs.

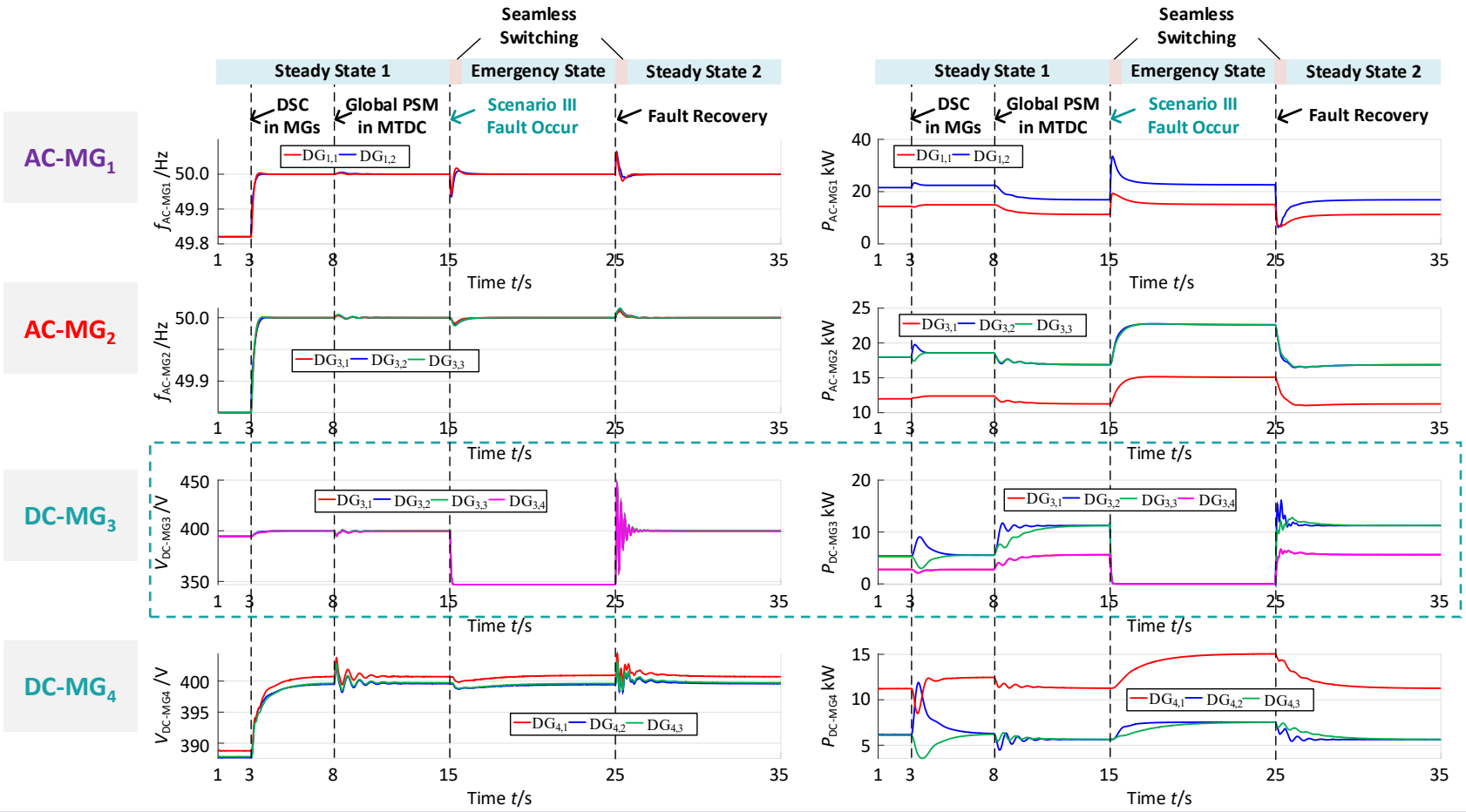

Global PSM for the MTDC-HMGs

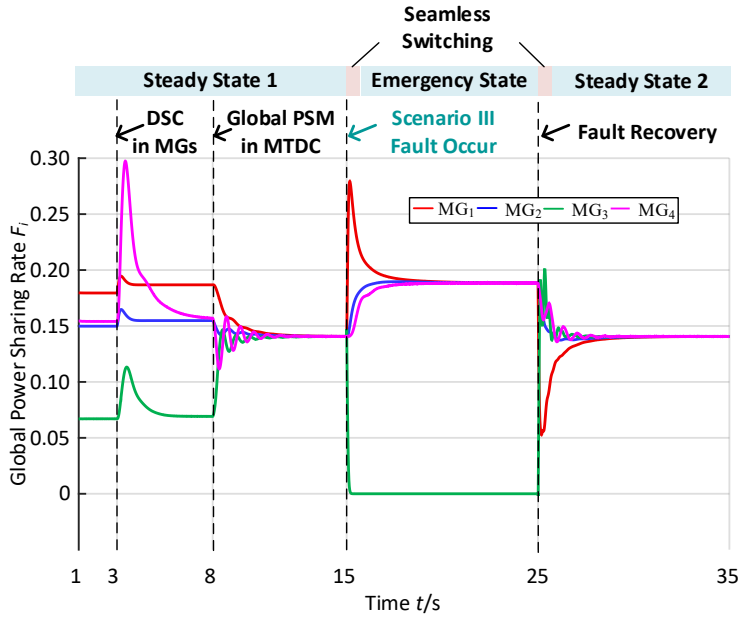

合肥工業大學 HEFEI UNIVERSITY OF TECHNOLOGY

- A multi-DC-voltage-level HMGs constructed at Changlin Power Substation in Hefei, Anhui, China.

- Capable of reverse power delivery.
- When a fault occurs on the 10kV distribution network, by utilizing the mode switching function of AC/DC and energy storage power sources, the power supply for important loads in the North Building (AC-MG) can be achieved.

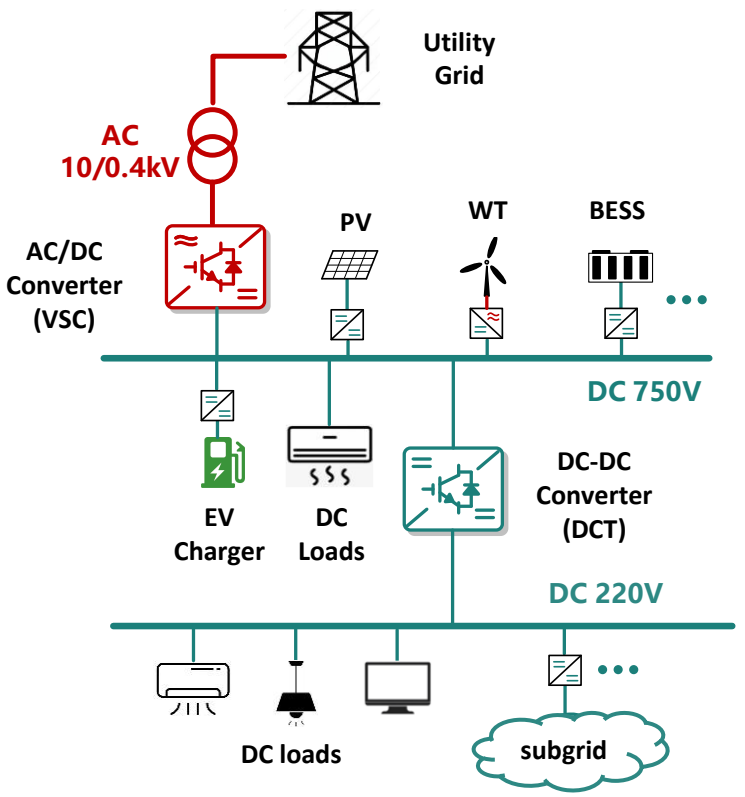

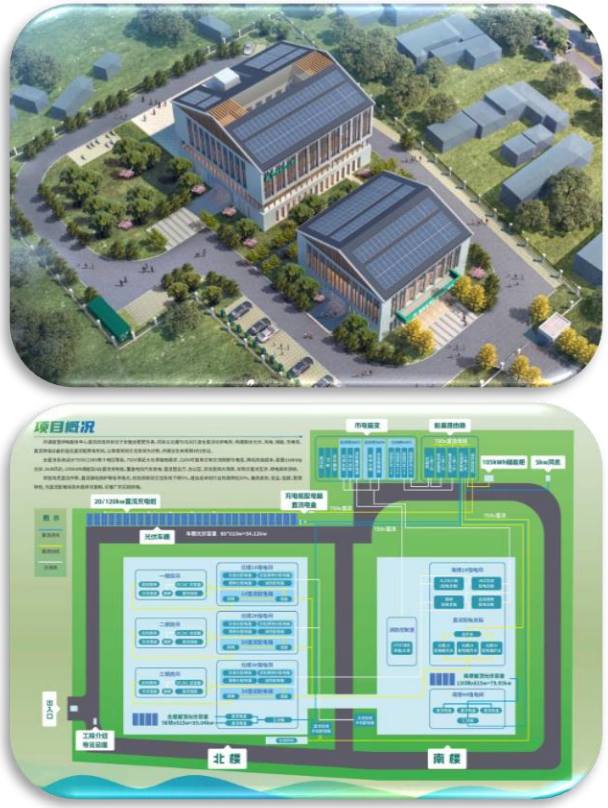

The Changlin Power Substation HMGs

- A five-terminal DC flexible interconnection demonstration project built in Jinzhai, Lu'an, Anhui, China.

It is designed to has **four modes**:

- Mode 1: Normal operation with No DC load
- Mode 2: Normal operation with DC load
- Mode 3: Any of the power supply area operation in AC islanding mode
- Mode 4: Operating as islanding MTDC-HMGs under 10kV line fault.

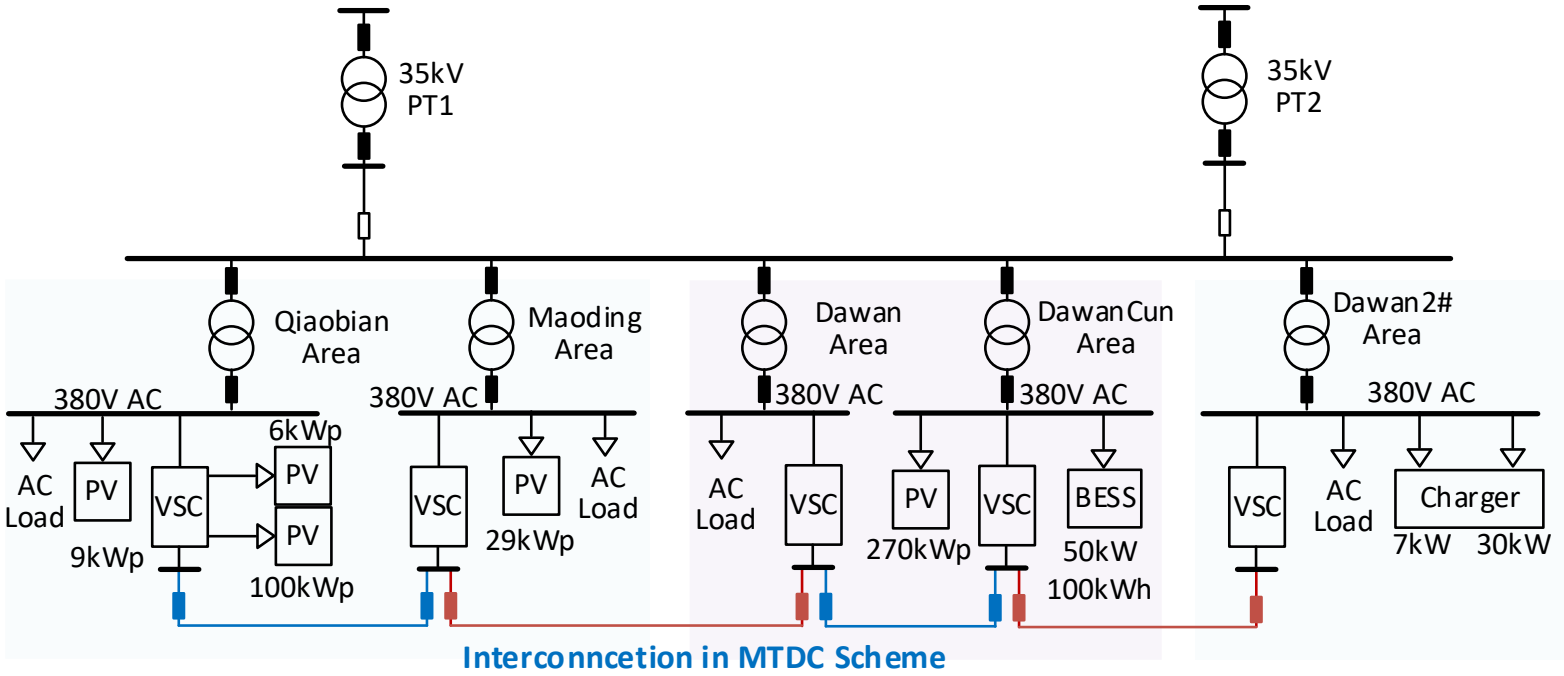

Five-terminal DC flexible interconnection distribution network

Conclusion
Discussion and Summary

A. The advantage of the MTDC-HMGs architecture lies in its ability to effectively isolate the impact of faults, with each MG unit being independent of one another.

B. The fault recovery process of MTDC-HMGs is rather complex, involving the switching of control modes and instructions for the PEDs, as well as the transformation of the communication system topology.

C. Some limitations of this research:

- When the grid strength of MGs are very weak, the power output capacities of corresponded PEDs are further be limited, which are not thoroughly considered and discussed;
- Possible control strategy switching on the DG side has not been given focused discussion.



Thank you for your attention!

合肥工業大學
HEFEI UNIVERSITY OF TECHNOLOGY