From Isolated Microgrids to Mission-Critical Energy Systems

Lessons Learned and Future Directions in Hybrid Power Systems

Hércules Oliveira | EQT LAB Equatorial Group | Research and Innovation

International Microgrid Symposium • June 2026

Presentation Outline



- 🌍 **Introduction and Background**
- ⚙️ **Project Challenges, Solutions, and Outcomes**
  - Case 1: Lençóis Island Project
  - Case 2: Grande Island Project
  - Case 3: CLA Microgrid Project
- 🔬 **Current and Future Developments**
  - Case 4: Anápolis Project
  - Case 5: Smart Flow Project
- 📊 **Conclusions**
- 🤝 **Acknowledgments**

Why Microgrids Matter?

Different applications require different levels of reliability, but all of them require resilient energy systems.

Challenge	Solution
Energy Access	Isolated Microgrids
Renewable Integration	Hybrid Generation
Resilience	Hybrid Generation + BESS + EMS
Mission Assurance	Advanced Microgrids

From essential access to strategic autonomy

2005-2008
Lençóis Island Project

Remote Communities

- Social Inclusion
- Basic Services
- Remote Locations

2010-2012
Grande Island Project

Renewable Integration

- Hybrid Energy Systems
- Energy Optimization
- Reduced Diesel Dependence

2020-2023
***μ*-Grid CLA Project**

Mission-Critical Infrastructure

- Aerospace Applications
- Grid-Connected & Islanded
- Resilient Power Supply

2024 (in progress)
Smart Grid BAAN Project

Strategic National Assets

- Zero-Export Control
- Energy Autonomy
- Enhanced Reliability

2025 (in progress)
Smart Flow Project

Grid Support Services

- Power Quality Improvement
- Peak Demand Reduction
- Backup Power

Case 1: Lençóis Island Project



Brazil *Maranhão* *Lençóis Island*



Lençóis Island

Site profile

- Remote island;
- No grid connection;
- Fishing community;
- Lençóis Island, state of Maranhão, Brazil.

History

Implemented between 2005 and 2008 as a pilot project to validate the technical and economic feasibility of decentralized energy solutions.

Impact

- Enhanced food and medicine storage;
- Improved quality of life;
- Socioeconomic development of the local community;
- Increased energy access.

Microgrid Topology — Lençóis Island Project

Single-line diagram · Hybrid isolated microgrid

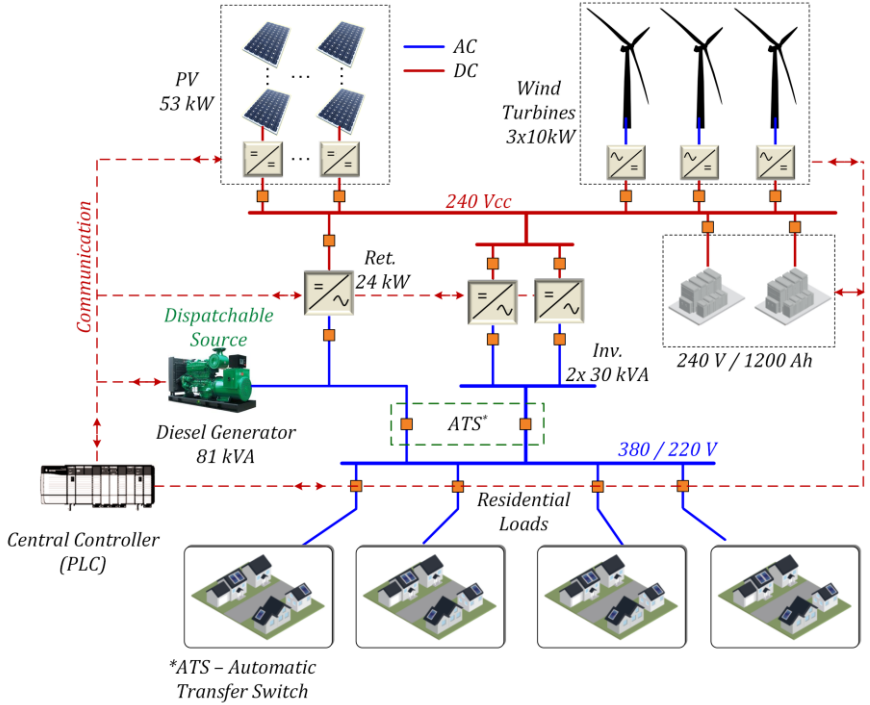

Lençóis Island microgrid topology

System ratings

- **Photovoltaic Panels** 53 kWp;
- **Wind Turbines** 3 x 10 kW;
- **Battery Bank** 240 V / 1200 Ah;
- **Rectifier** 24 kW;
- **Inverters** 2 x 30 kVA (grid-forming);
- **Diesel Genset** 81 kVA (backup);
- **Distribution Network** 380/220 V AC, ~100 households.

Challenges — Lençóis Island Project

Key challenges faced during implementation

Regulatory

- No regulation existed.



Logistics

- Transportation, loading, and unloading of equipment.





Environment

- Protected area;
- Environmental licensing required.



Technology

- No commercial grid-forming Inverters;
- Equipment development required.



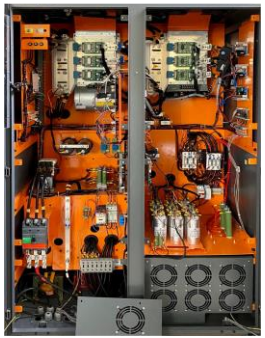

Challenges — Lençóis Island Project

Key challenges faced during implementation

The interaction between the diesel generator and the SCR rectifier of similar power rating caused severe voltage sags and distortion

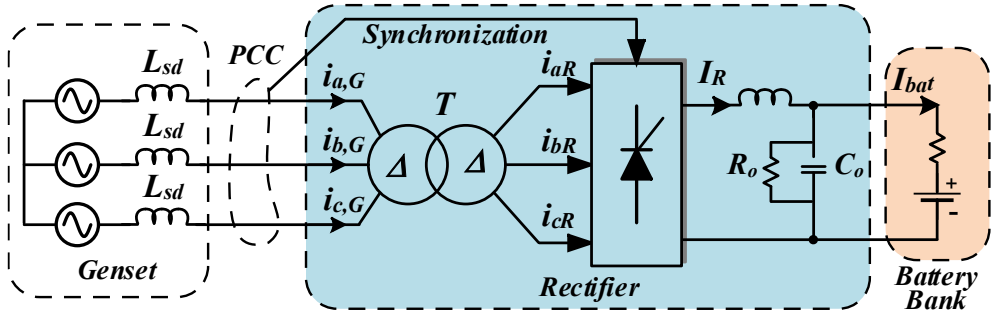

Circuit topology

Diesel generator with rectifier for battery bank charging

Problems

- Total Harmonic Distortion (THD) exceeded 30%;
- Voltage notches and fluctuations triggered rectifier protections;
- Battery charging became unstable.

Conventional Solution

- Increase diesel generator size to **150-250% of rectifier power.**

Challenges — Lençóis Island Project

Key challenges faced during implementation

The interaction between the diesel generator and the SCR rectifier of similar power rating caused severe voltage sags and distortion

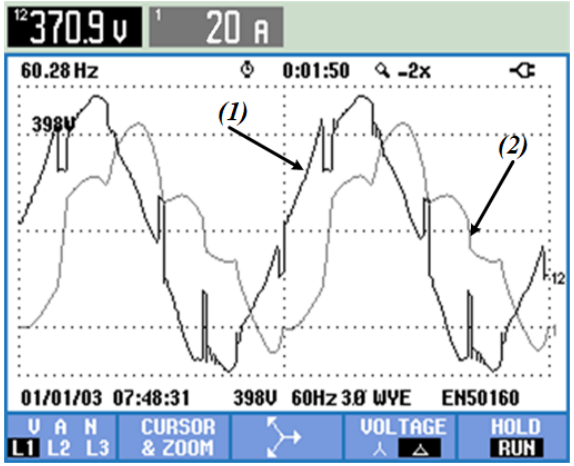

Voltage Waveform

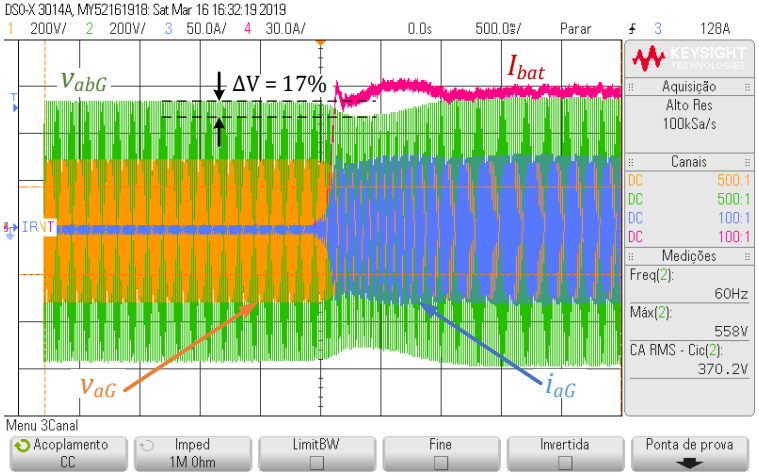

Voltage Sag

When the rectifier + generator set enters operation, voltage sags occur and trigger the rectifier protections to trip.

Developed Solution — Lençóis Island Project

Instead of increasing generator size, we developed:

Hardware

- Harmonic Filters (5th, 7th and 11th);
- Notch Reduction Circuit (NRC);
- Capacitive Reactive Power Compensation Circuit (RCCC).

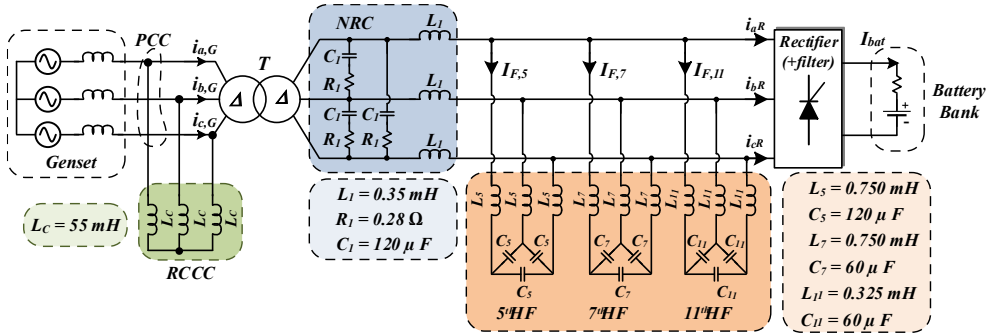

Software

- Rectifier soft-start function;
- Current ramp limited to 1 A/s;
- Stable battery charging.

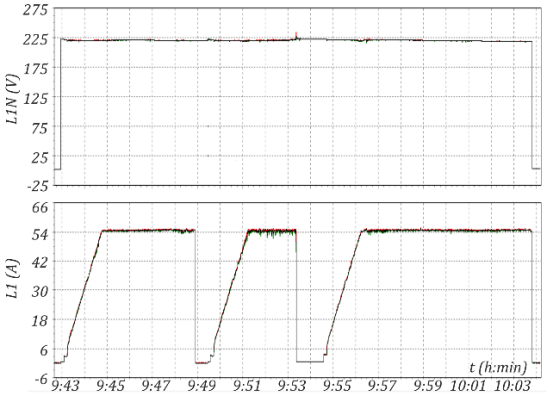

💡 **Lesson Learned:** Engineering innovation is often more valuable than simply adding more equipment.

Results — Lençóis Island Project

Indicator	Before	After
Voltage THD	>30%	~10%
Voltage Stability	Poor	Stable
Generator Oversizing	Required	Not Required
Operational Cost	High	Reduced

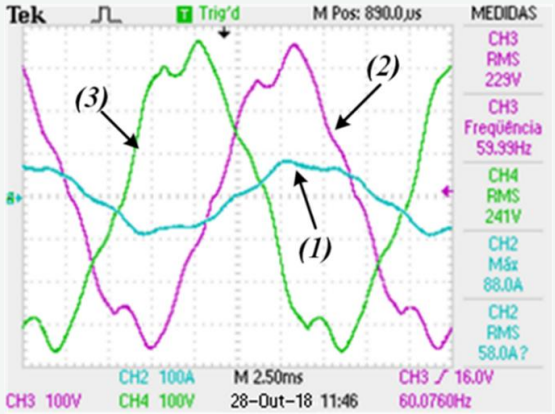

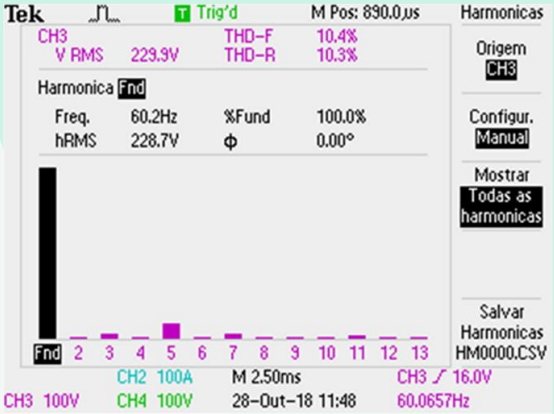

Outcome: The developed solution stabilized the grid, eliminated oversizing, and reduced operational cost.

Case 2: Grande Island Project



Brazil *Maranhão* *Grande Island*



Grande Island

Site profile

- Remote island;
- No grid connection;
- Fishing community;
- Grande Island, state of Maranhão, Brazil.

History

Implemented between 2010 and 2012 to evaluate the hybrid renewable generation topology of the Lençóis microgrid against a solar-only configuration, validating the technical and economic feasibility.

Impact

- Improved quality of life;
- Socioeconomic development of the local community;
- Increased energy access.

Microgrid Topology — Grande Island Project

Single-line diagram · Isolated microgrid

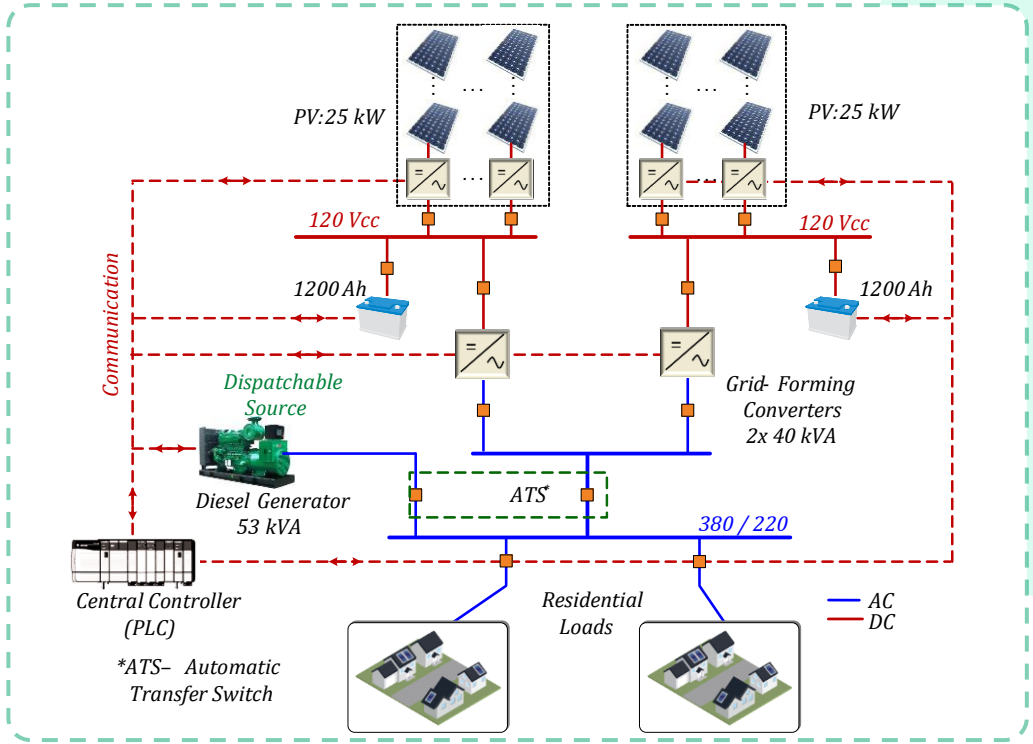

Grande Island microgrid topology

System ratings

- **Photovoltaic Panels**
  50 kWp
- **Battery Bank**
  120 V / 1200 Ah
- **Inverters**
  2 x 40 kVA
  (bidirectional grid-forming)
- **Diesel Genset**
  53 kVA (backup)
- **Distribution Network**
  380/220 V AC, ~50 households

Challenges — Grande Island Project

Key challenges faced during implementation: Accessibility and Transportation



Microgrid Performance — Case 1 vs. Case 2

Lençóis Island vs. Grande Island — 2019 annual data

Case 1 — Lençóis Island

Diesel + PV + Wind hybrid system

- **Annual generation:** ~78,700 kWh.
  - PV 53% (41,935 kWh);
  - Wind 34% (27,043 kWh);
  - Diesel 13% (9,765 kWh).
- **Seasonality:** diesel drops with wind peaks in Aug–Dec;
- **Resilience:** diversified mix reduces intermittency risk.

Case 2 — Grande Island

Diesel + PV hybrid system

- **Annual generation:** ~72,400 kWh.
  - PV 79% (57,300 kWh);
  - Diesel 21% (15,100 kWh).
- **Seasonality:** higher diesel use in Dec–Feb (rainy, lower solar).
- **Resilience:** dependent on a single renewable source.

Case 3: μ-Grid CLA Project



Brazil



Maranhão

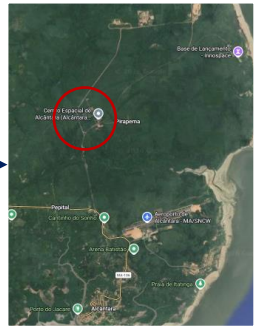

Alcântara Launch Center



Alcântara Launch Center (CLA)

Site profile

- Aerospace applications;
- Grid-connected and islanded;
- Resilient power supply;
- Alcântara, state of Maranhão, Brazil.

History

It was implemented between 2020 and 2023 to ensure an uninterrupted power supply during rocket launch campaigns.

Impact

- Microgrid capable of operating both grid-connected and islanded;
- Focus on resilience and high reliability.

Microgrid Topology — μ-Grid CLA Project

Single-line diagram · Mission-critical microgrid

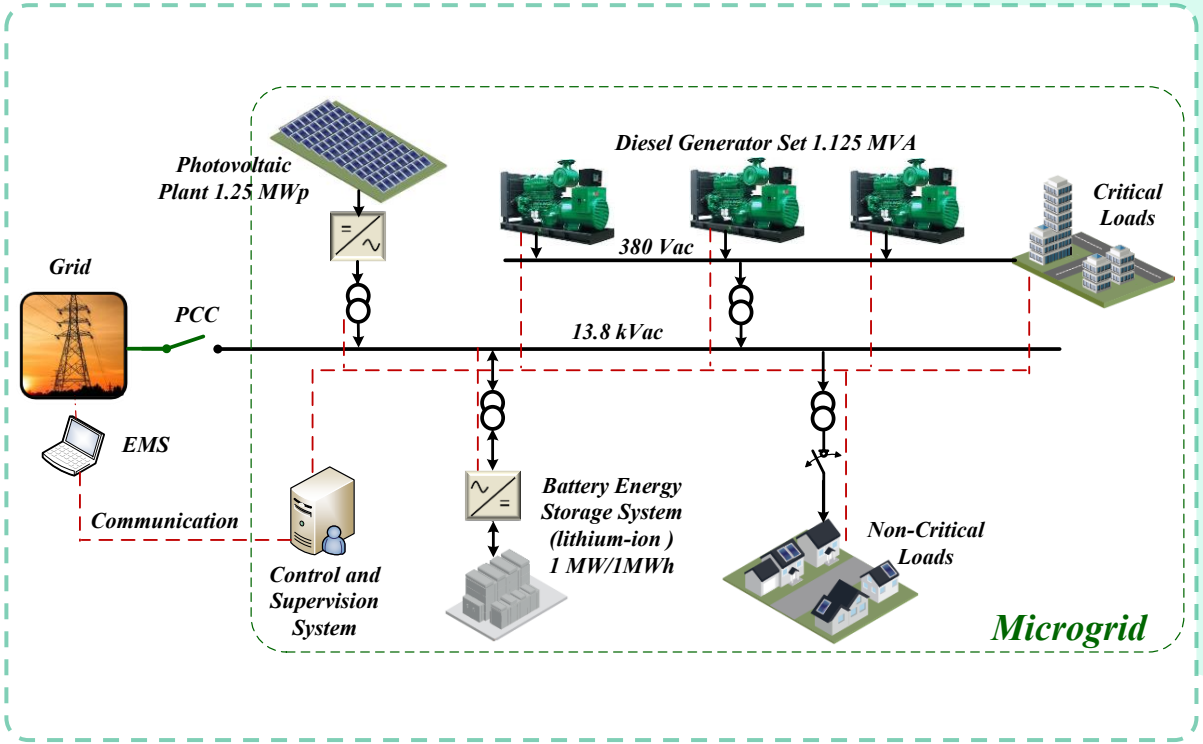

μ-Grid CLA microgrid topology

System ratings

- **Photovoltaic Panels**
  1.25 MWp
- **Battery Bank (BESS)**
  1 MW / 1MWh
- **Diesel Genset**
  1.125 MVA (backup)
- **Distribution Network**
  13,8 kV AC
- **Load**
  650 kWp

Microgrid Topology — *μ*-Grid CLA Project

Five applications delivering autonomy, resilience and cost optimization for the Alcântara Launch Center.

Backup

Keeps the Launch Center energized during contingencies, ensuring continuity of rocket launch campaigns.

Energy Arbitrage

Energy storage enables consumption management and cost reduction, particularly under variable electricity tariffs and high solar generation availability.

Resilience and Reliability (n-1)

Reduces the magnitude and/or duration of disruptive events during rocket launch campaigns.

Peak Shaving

Supplies stored energy during peak demand periods, reducing generator loading, and fuel consumption.

Voltage Support

Maintains voltage levels within operational limits, improving power quality and grid stability.

Power Factor Control

Provides reactive power compensation, reducing losses and improving the efficiency of the electrical system.

Challenges — μ-Grid CLA Project

Key challenges faced during implementation: Inrush current during black start

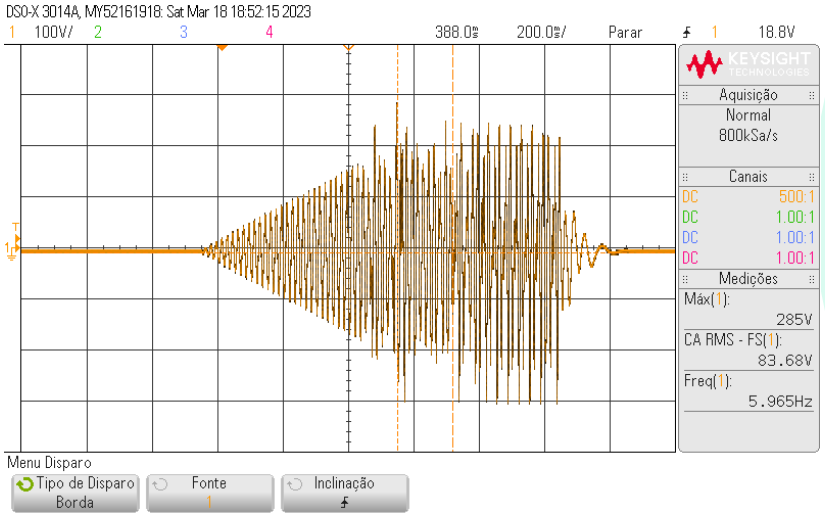

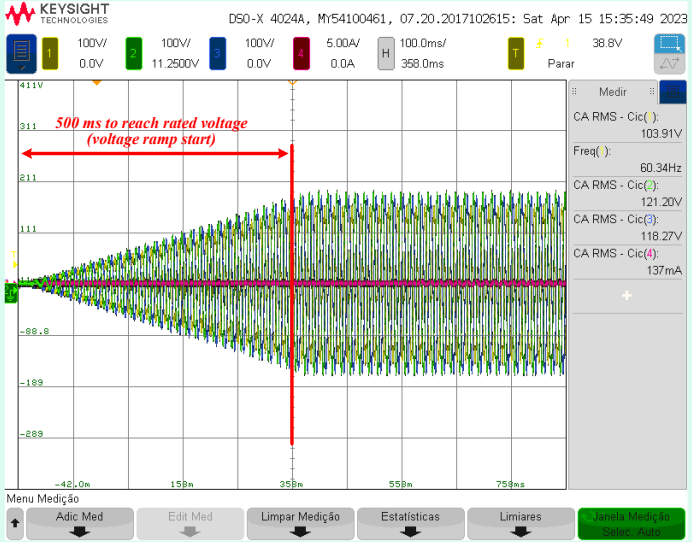

⚠ Magnetizing Inrush Current

Mitigation

- ✅ **Energization with voltage ramping.**
- ✅ **Current-limiting control strategy.**

Challenges — μ-Grid CLA Project

Key challenges faced during implementation: Protection Coordination

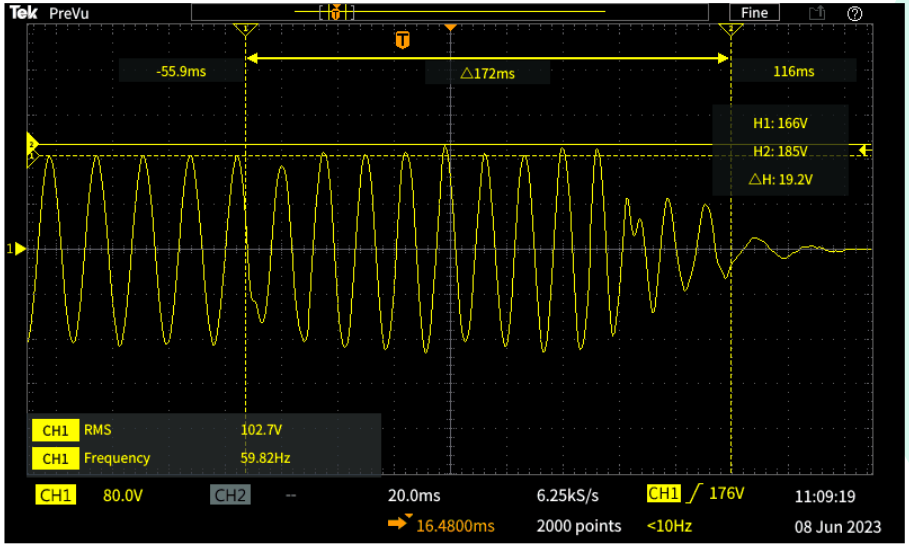

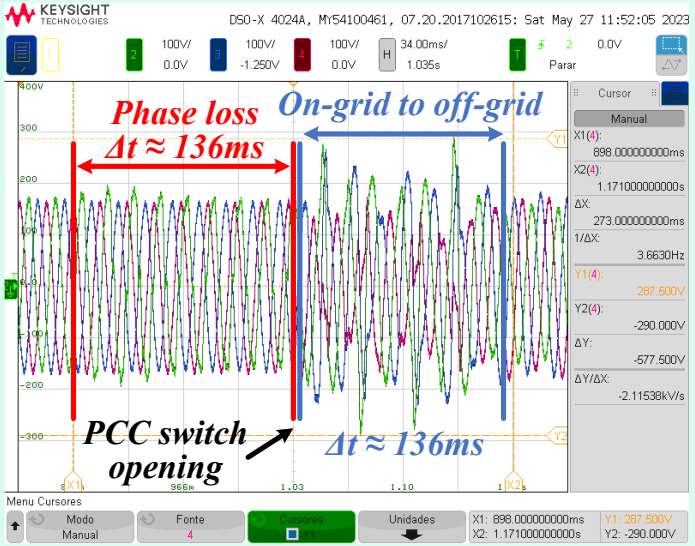

Protection Coordination

- Must be properly adjusted to ensure selective fault clearing, isolating only the affected section while maintaining the operation of the remaining system.

Next section

Current and Future Cases

The following pages present additional microgrid projects and their applications in different operational contexts.

Case 4: Anápolis Project



Brazil

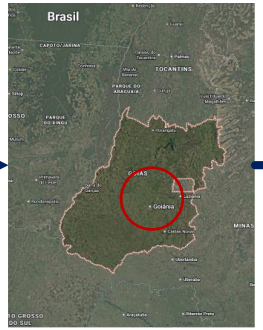

Goiás



Anápolis air force base



Anápolis air force base

Site profile

- Air force base applications;
- Grid-connected and islanded;
- Resilient power supply;
- Anápolis, state of Goiás, Brazil.

History



Expected impacts

- Microgrid capable of operating both grid-connected and islanded;
- Focus on resilience and high reliability.

Microgrid Topology — Anápolis Project

Single-line diagram · Mission-critical microgrid

Application

- Reverse Power Flow Mitigation;
- Peak Shaving and Load Shifting;
- Backup Power Supply;
- Reactive Power Control.

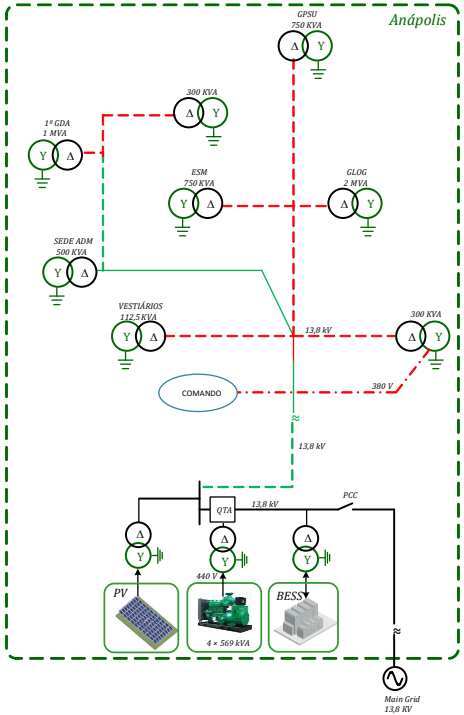

System ratings

- **Photovoltaic Panels**
  2 MWp
- **Battery Bank (BESS)**
  2 MW / 2 MWh
- **Diesel Genset**
  2.5 MVA (backup)
- **Distribution Network**
  13.8 kV AC
- **Load**
  980 kWp

Anápolis Project microgrid topology

Case 5: Smart Flow Project



Brazil *Maranhão* *SE Alto Parnaíba*



SE Alto Parnaíba

Site profile

- Utility substation;
- Grid-connected and islanded;
- Resilient power supply;
- Alto Parnaíba, state of Maranhão, Brazil.

History



Expected impacts

- Power quality improvement;
- Voltage support;
- Postponed grid expansion investments;
- Increased load connection capacity.

Microgrid Topology — Smart Flow Project

Single-line diagram · Utility substation microgrid

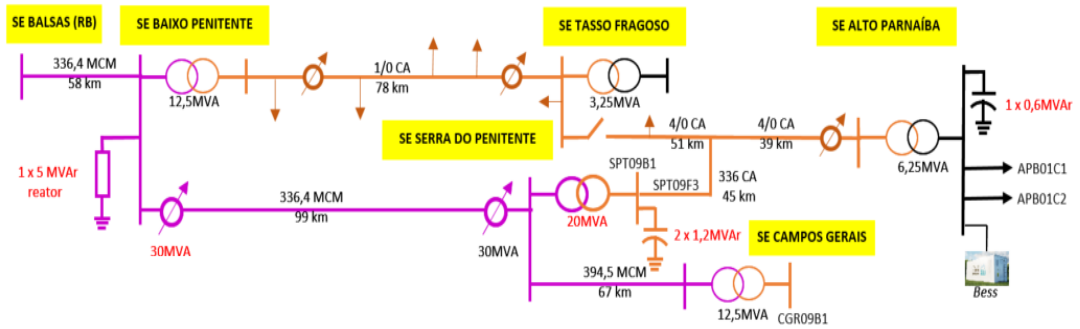

- ❑ Population: 11,109 inhabitants.
- ❑ Distribution Network Length: 241 km.
- ❑ Customers: Approximately 4,400.
- ❑ Network Characteristics:
  - Radial distribution system operating at 69 kV, 34.5 kV, and 13.8 kV;
  - Multiple voltage regulation and reactive compensation devices.

Smart Flow Project microgrid topology

Application

- Voltage Support;
- Reactive Power Control;
- Reverse Power Flow Mitigation;
- Peak Shaving and Load Shifting;
- Backup Power Supply.

Conclusions

Scalability
Lessons from remote communities can scale to mission-critical infrastructures.

Resilience
Renewable diversity improves resilience and energy security.

Storage Revolution
Storage is transforming modern power systems.

Reliable Backup
Diesel generation remains essential for critical operations and contingency support.

The Heart
BESS is no longer an accessory — it is the heart of modern microgrids.

The Brain
EMS is becoming the brain of microgrids, enabling intelligent operation.

The future of hybrid power systems lies in the integration of renewable generation, energy storage, dispatchable backup, and intelligent control.

Acknowledgments

- **This work was developed with the support:**
  - Equatorial Group;
  - Federal University of Maranhão;
  - Equatorial Group Institute of Science and Technology;
  - Research, Development and Innovation Program regulated by **ANEEL (Brazilian Electricity Regulatory Agency)** through Project PD-00371-0048/2024.

Thank You

Questions & Discussion

Hércules Oliveira

hercules@ieee.org
Research and Innovation • EQT LAB Equatorial Group



Hércules Oliveira

LinkedIn