Microgrid Configurations, Controls, and Generac BESS for C&I



Learning Objectives

1. Microgrid components
2. Microgrid applications
3. Case studies
4. Generac BESS options for C&I

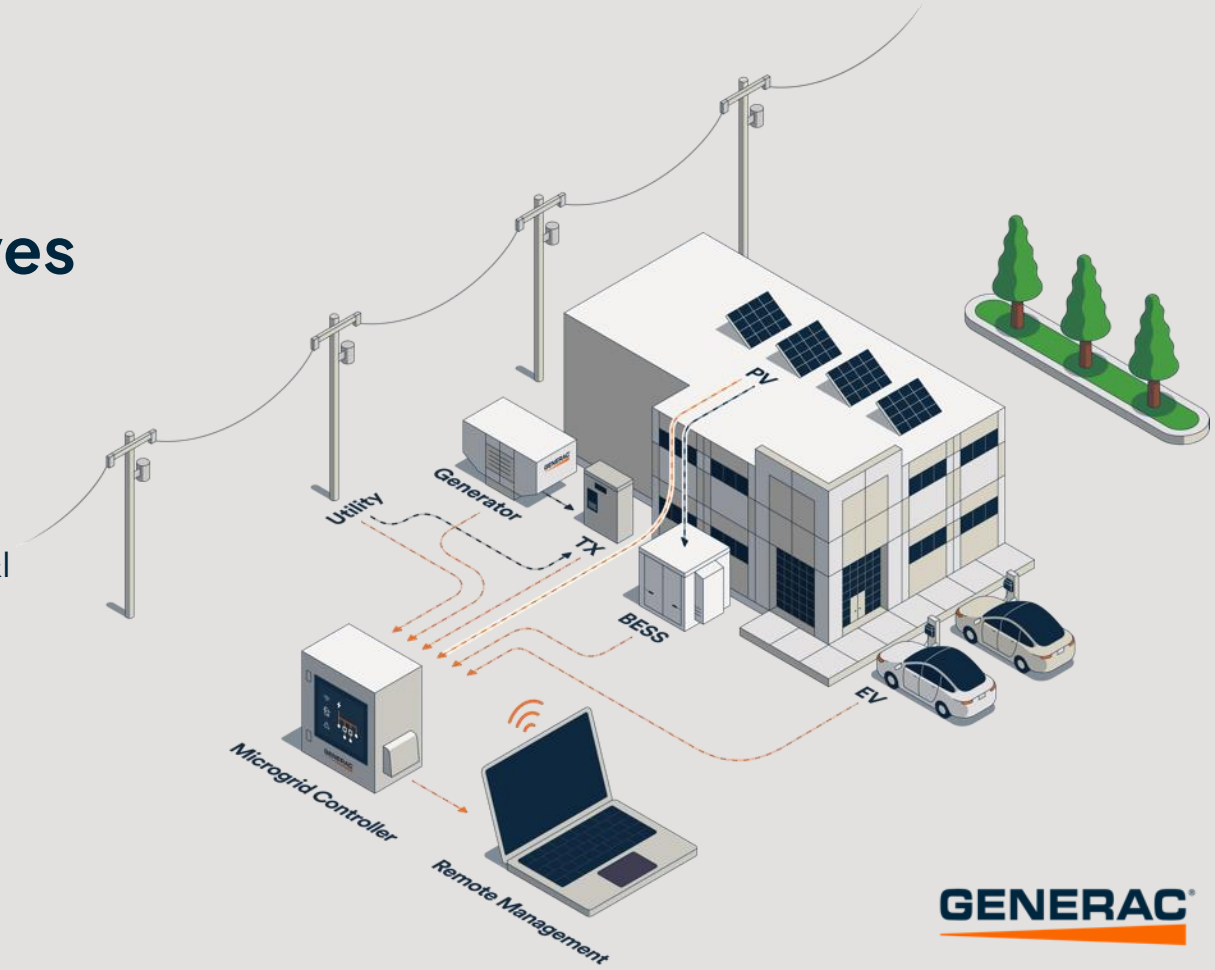

GENERAC

Microgrid Components

Microgrid Design

Project Examples

GENERAC

ARC Microgrid Controller

An **operator-focused** microgrid solution combining on-site controls with cloud connectivity.



Functionality

Behind the Meter

- Utility Rate Optimization
  - Demand Charge Management
  - TOU Shifting
  - Export Limiting
  - Demand Response
- Resilient / Backup Power
- Monitoring and Operations



Functionality

Off-grid

- Energy resource control and coordination
  - Active Curtailment
  - Load control
- Generator Integration
- Monitoring and Operations





Microgrid Components



Controls Portfolio

PRC
Protective Relay Cabinet



LCC
Load Control Center



RMC
Revenue Meter Cabinet

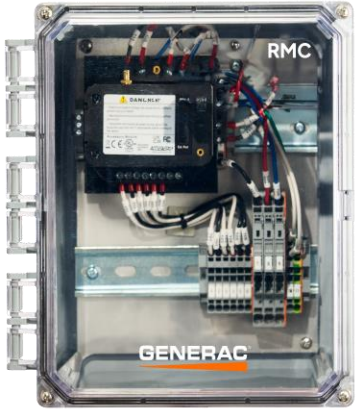

GCC
Generator Connect Cabinet



SBE Battery Energy Storage Portfolio

0 1000 2000 3000 4000 5000+ kWh

SBE Cabinet

Usable Energy
Battery Chemistry: LFP



Fully integrated cabinet solutions

SBE Container

Usable Energy
Battery Chemistry: LFP



Fully integrated AC containers

SBE Block

Usable Energy
Battery Chemistry: LFP



DC blocks

Generator portfolio



Bridge power solutions

Microgrid Components

› Microgrid Design

Project Examples

GENERAC

Stand-Alone Storage Microgrid

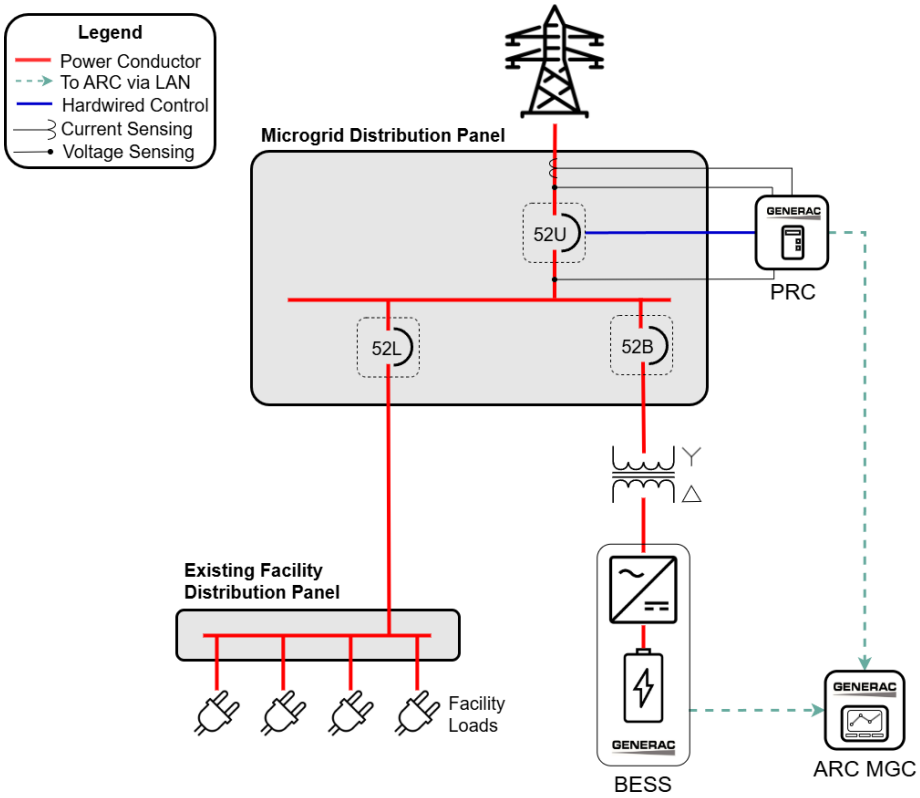

Grid-tied function

- Time of use
- Peak shaving

Off-grid function

- Limited backup

GENERAC

Solar and Storage Microgrid

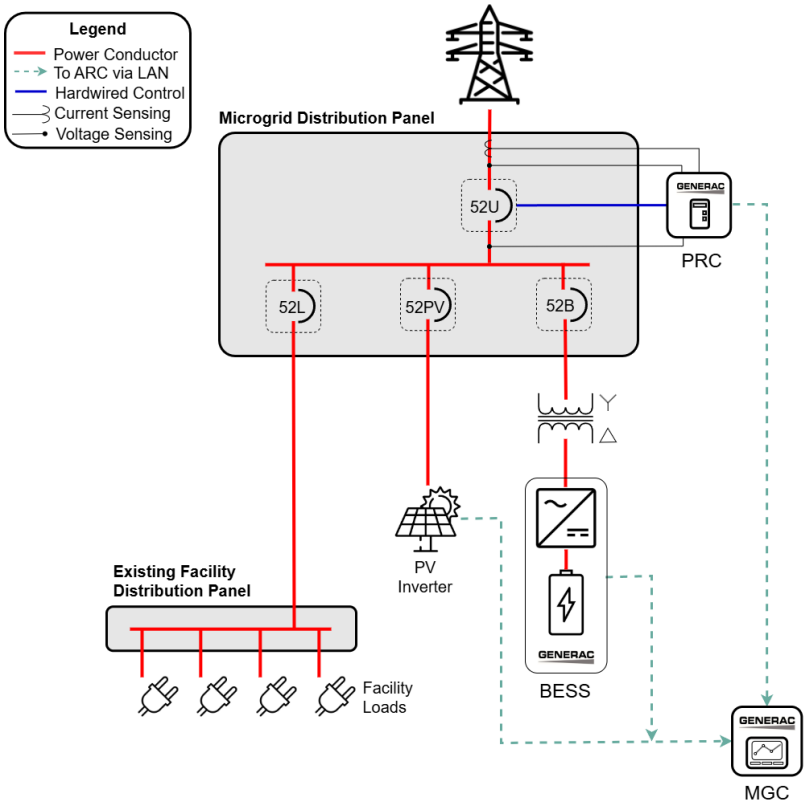

Grid-tied function

- Time of use
- Peak shaving
- Renewable energy self-consumption
- Export limiting

Off-grid function

- Limited backup power
- Recharging BESS with PV
- Optional: load management to extend battery life

GENERAC

Solar and Storage with Generator behind ATS Microgrid

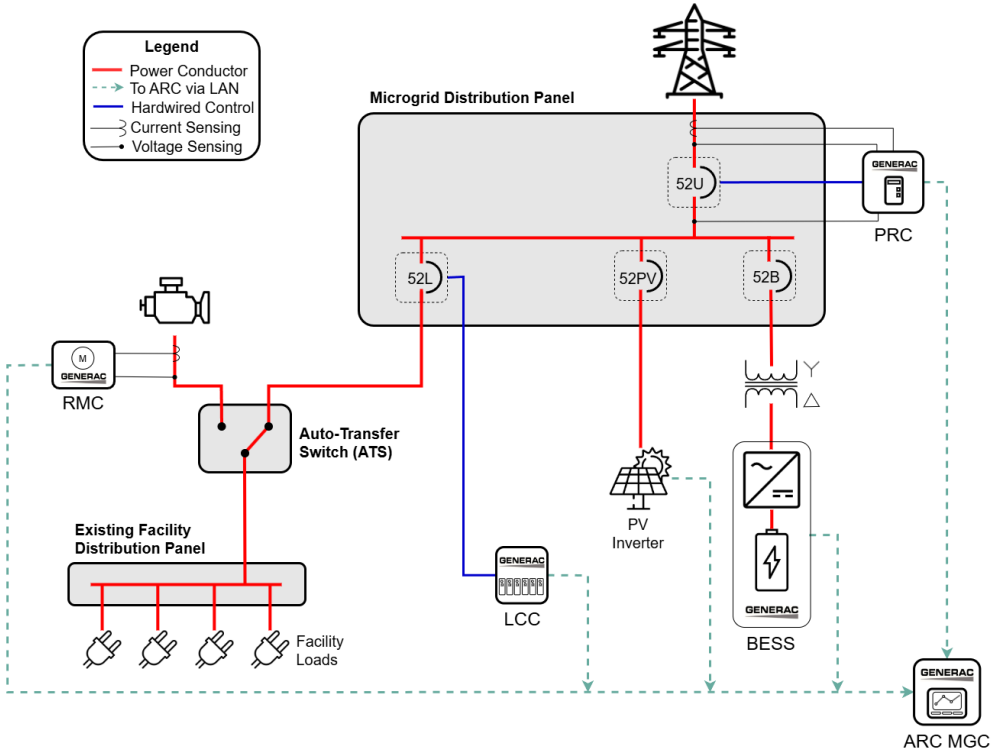

Grid-tied function

- Same as use case #1 or #2 (depending if PV is present)

Off-grid function

- PV+BESS for short term backup
- Generator for long term backup
- Optional: Control of the ATS allows system to switch between Gen and PV+BESS as conditions permit

Full Microgrid with Baseload Capable Generator

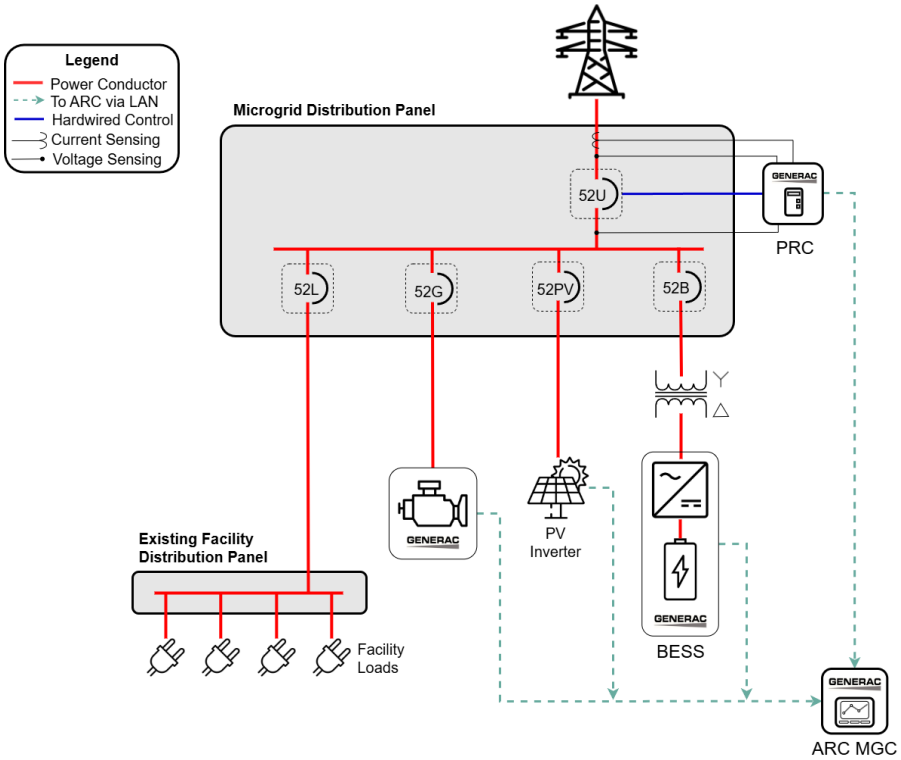

Grid-tied function

- Same as use case #1 or #2 (depending if PV is present)

Off-grid function

- PV+BESS for short term backup
- Generator can be brought on seamlessly to charge BESS
- Can toggle between PV+BESS and PV+BESS+Gen operation as conditions permit

GENERAC

Full Microgrid with Legacy Generator

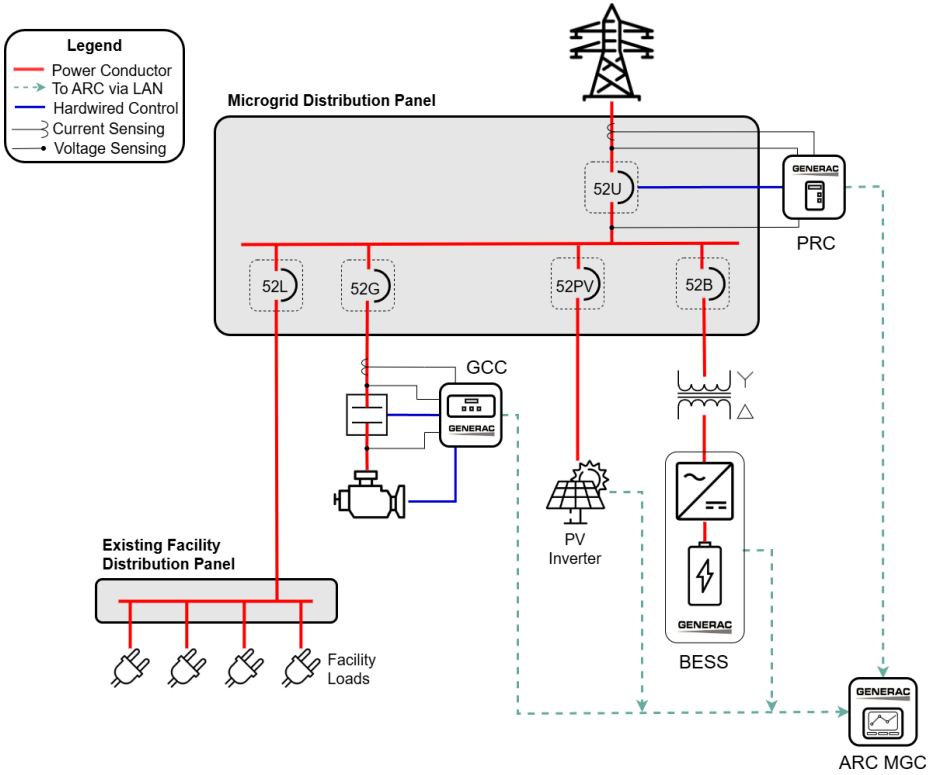

Grid-tied function

- Same as use case #1 or #2 (depending if PV is present)

Off-grid function

- PV+BESS for short term backup
- Generator can be brought on seamlessly to charge BESS
- Can toggle between PV+BESS and PV+BESS+Gen operation as conditions permit

Question Break



GENERAC

POWER FORWARD
2025 ANNUAL CONFERENCE

Microgrid Controls
Microgrid Design
› Project Examples

GENERAC

Projects

Majuro Atoll Project

Marshall Islands

- Backup power
- TOU Shifting
- Peak demand shaving







Projects

Majuro Atoll Project

Marshall Islands

- 40kw Oztek Inverters (3)
- 430 kWh KORE Power Batteries
- 50 kW SMA CORE1 PV Inverters (3)
- SEL-751 Protective Relay







Common MG Configuration w/Gen

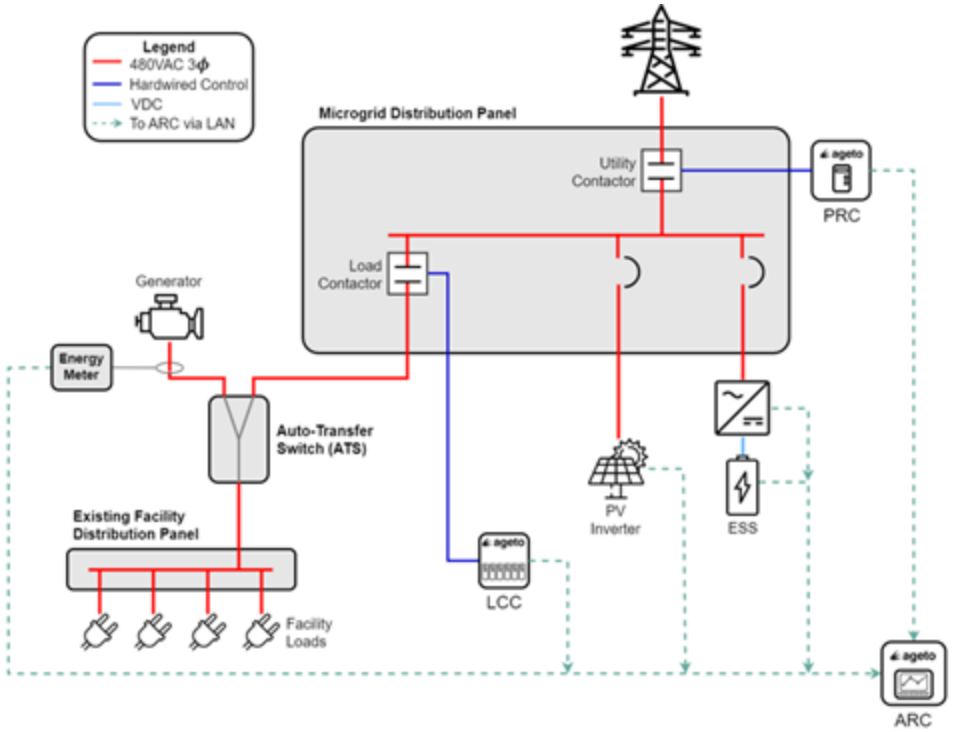

Assets:

- Solar
- ESS
- Generator (behind ATS)

GENERAC

Initium Dashboard: Load

- LOAD (kW)

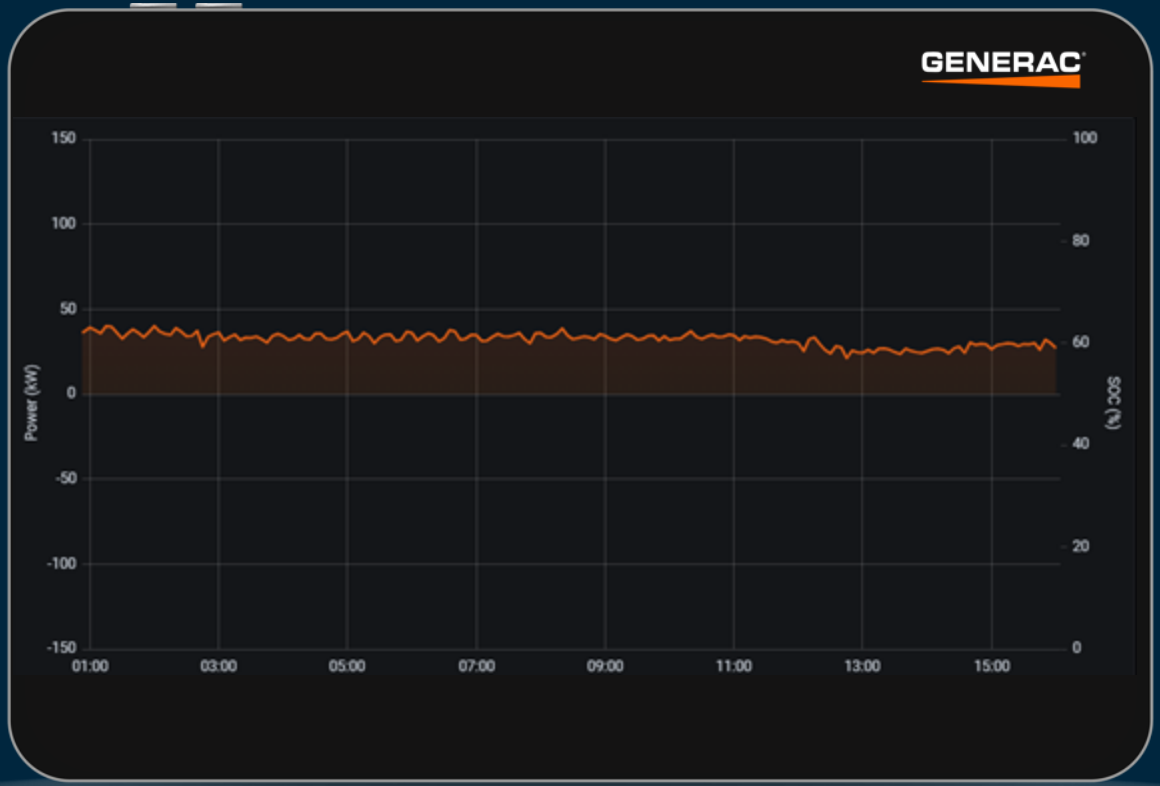

Initium Dashboard: Utility Outage

- LOAD (kW)
- Utility (kW)



Initium Dashboard: + Solar

- LOAD (kW)
- Utility (kW)
- Solar (kW)



Initium Dashboard: + Storage

- LOAD (kW)
- Utility (kW)
- Solar (kW)
- BESS (kW)



Initium Dashboard: + Generator

- LOAD (kW)
- Utility (kW)
- Solar (kW)
- BESS (kW)
- Generator (kW)



Initium Dashboard: + Storage

- LOAD (kW)
- Utility (kW)
- Solar (kW)
- BESS (kW)
- Generator (kW)
- SOC (%)



Projects

GENERAC

Calistoga Boys & Girls Club

Calistoga, California

- Backup Power
- Load Management
- TOU Shifting
- Peak Demand Savings
- SGIP



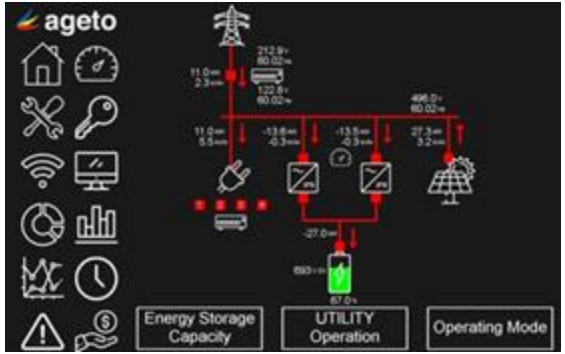



Vital Energy

Projects

GENERAC

Calistoga Boys & Girls Club

Calistoga, California

- 40 kW Oztek OZpcs-RS40 Inverter (2)
- 288 kWh KORE Power Battery (1)
- 33 kW SMA CORE1 PV Inverter (1)
- SEL-751 Protective Relay (1)



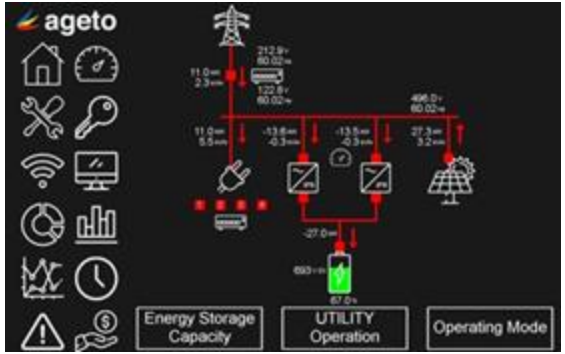



Vital Energy

Common MG Configuration

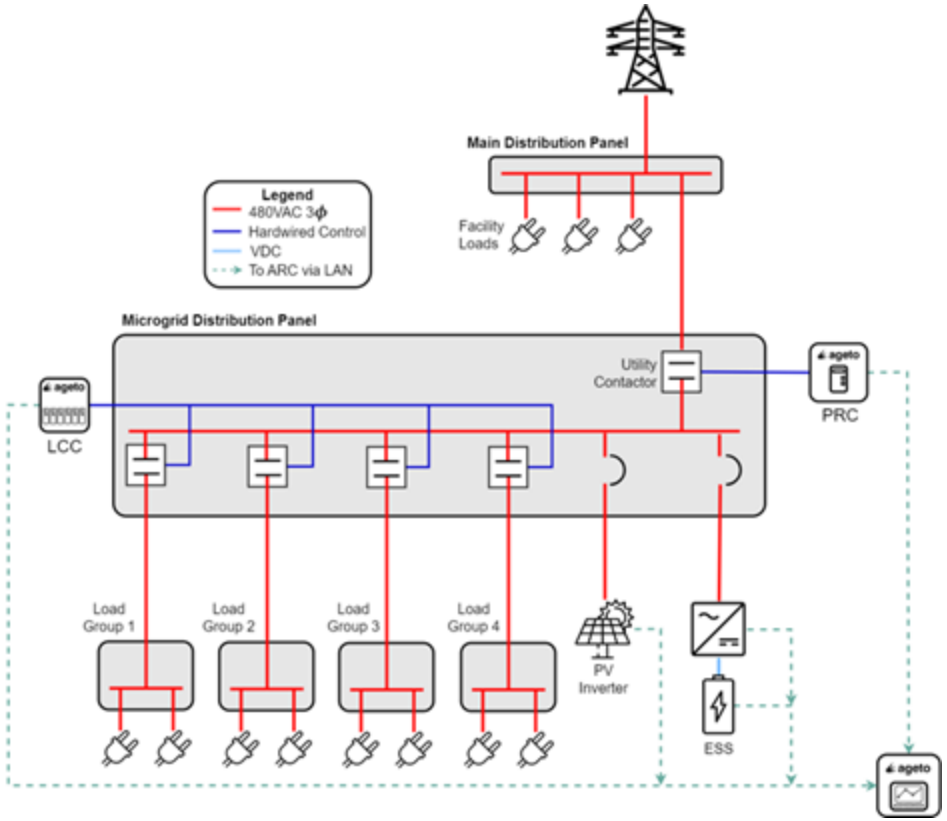

Assets:

- Solar
- ESS
- Load Management

GENERAC

Initium Dashboard: Rate Opt

- LOAD (kW)
- Utility (kW)
- Solar (kW)
- BESS (kW)
- SOC (%)



Initium Dashboard: Rate Opt

- LOAD (kW)
- Utility (kW)
- Solar (kW)
- BESS (kW)
- SOC (%)



Initium Dashboard: Rate Opt

- LOAD (kW)
- Utility (kW)
- Solar (kW)
- BESS (kW)
- SOC (%)



Initium Dashboard: Rate Opt

- LOAD (kW)
- Utility (kW)
- Solar (kW)
- BESS (kW)
- SOC (%)



Initium Dashboard: Rate Opt

- LOAD (kW)
- Utility (kW)
- Solar (kW)
- BESS (kW)
- SOC (%)

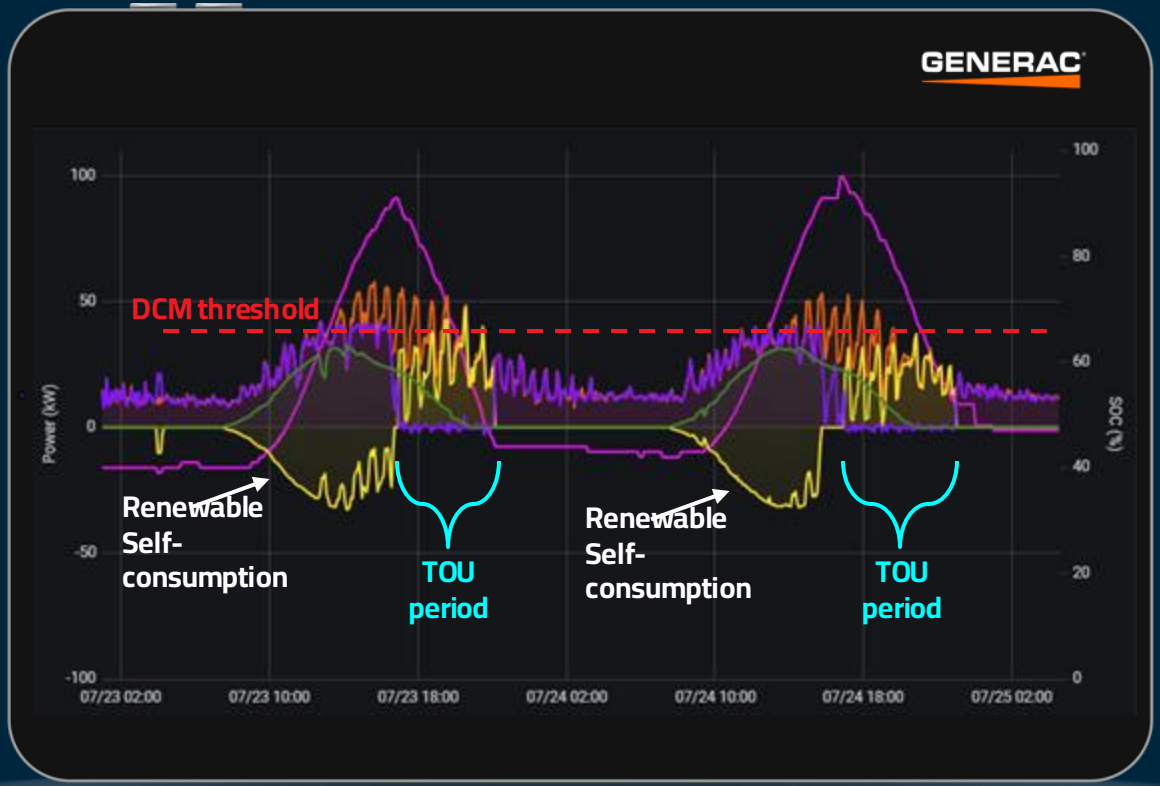

Projects

Cowlitz Health Center

Longview, WA

- Backup power
- Legacy PV & generator integration
- Peak shaving







Projects

Cowlitz Health Center

Longview, WA

- 125kW/1152 kWh Generac SBE BESS
- 100 kW SolarEdge SE50KUS PV inverters (2)
- SEL-751 Protective Relay
- 25 kW PV SIL-500 + microinverters (existing)
- 100kW Generac SG100 generator (existing)





Common MG Configuration

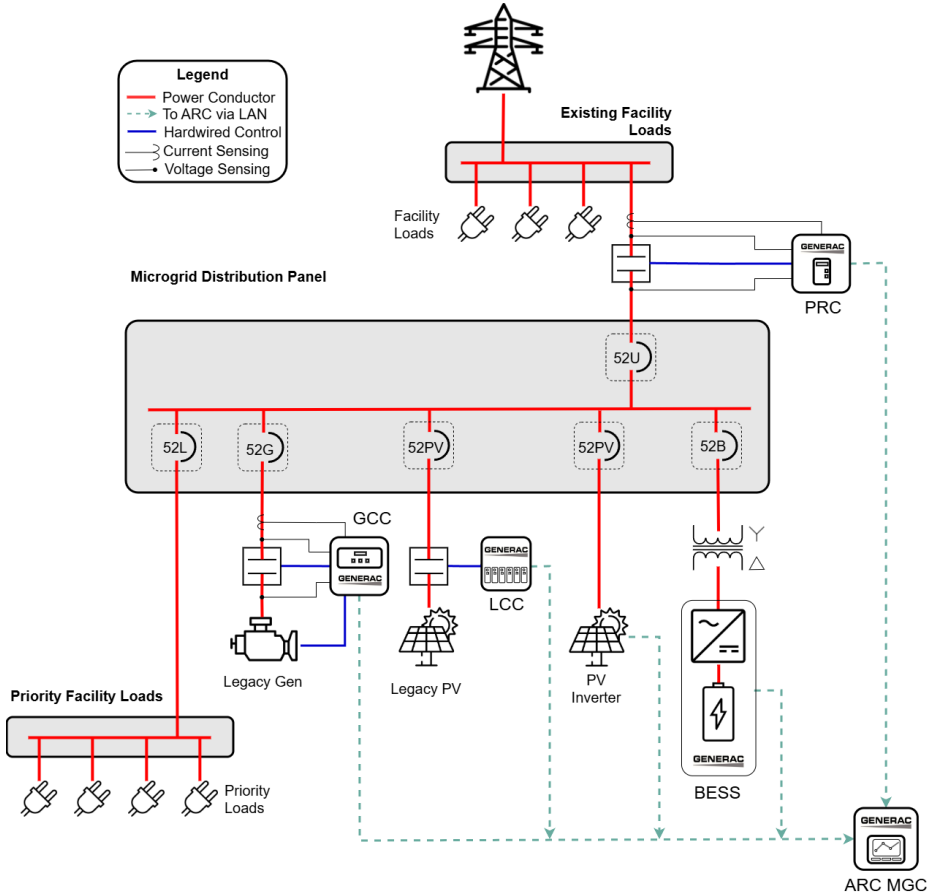

Assets:

- Solar
- ESS
- Legacy generator

Initium Dashboard: Utility Outage

- LOAD (kW)
- Utility (kW)



Initium Dashboard: + Generator

- LOAD (kW)
- Utility (kW)
- BESS (kW)
- Generator (kW)

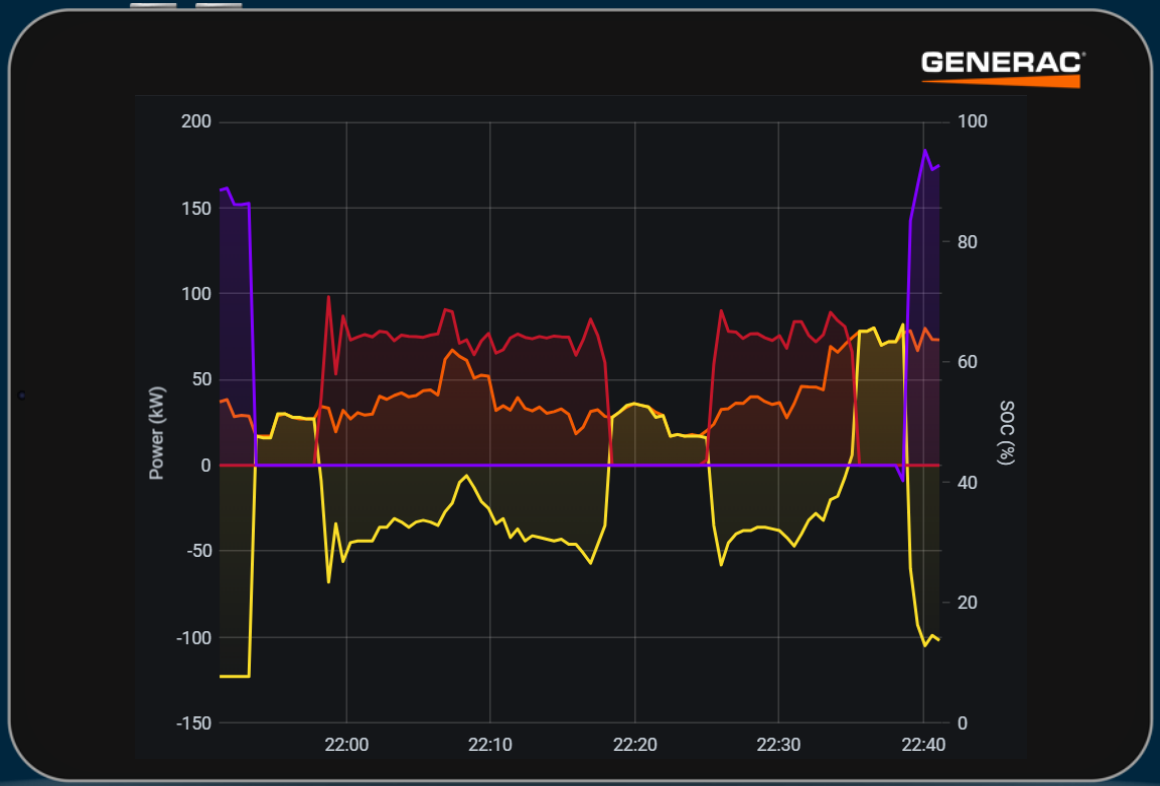

Concept → Install

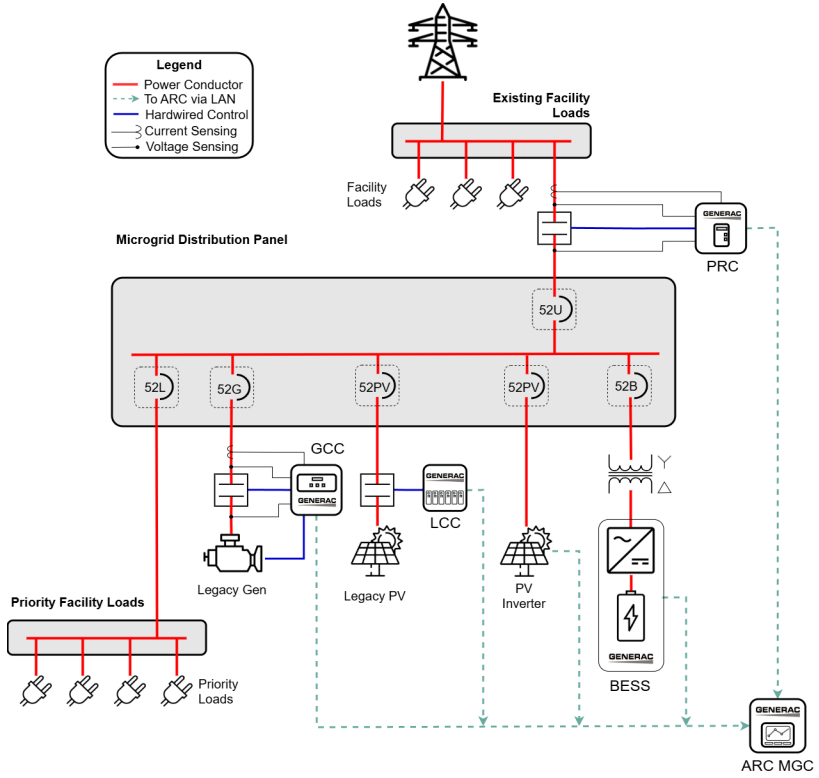

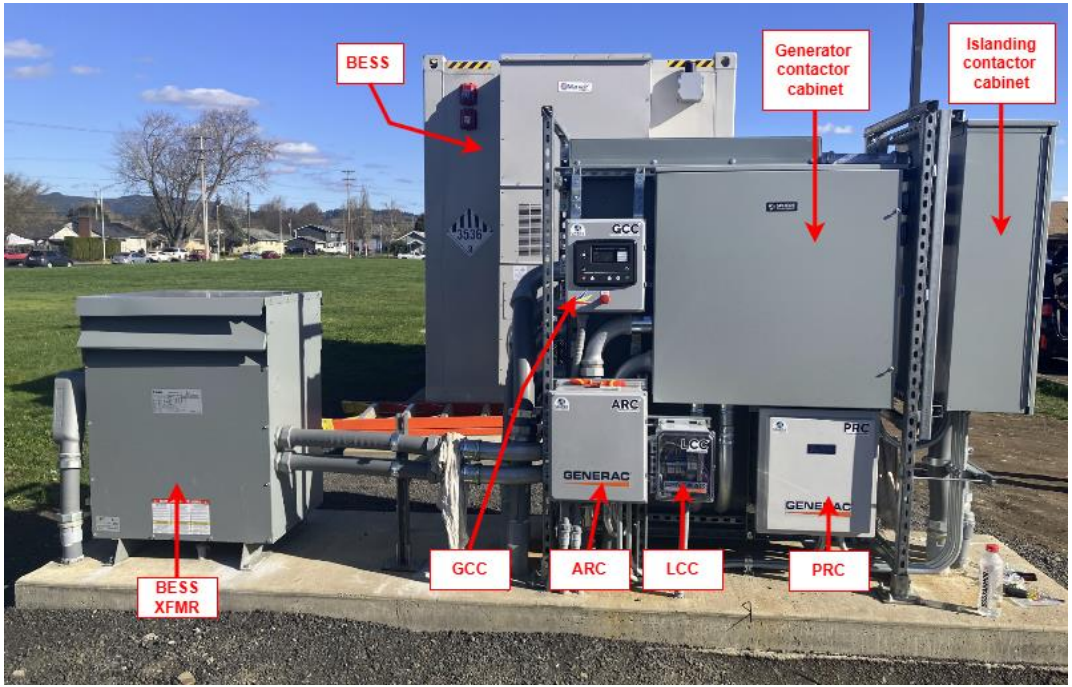

GENERAC

Question Break



GENERAC

POWER FORWARD
2025 ANNUAL CONFERENCE

A Few Lessons Learned

- Ensure the functionality you want from your MG:
  - Has been demonstrated (ideally in the field)
  - Is not limited by DER functionality
  - Is not limited by electrical design
- Pull in your OEMs early in the design phase
- Ensure your MG components can function as a cohesive system to meet the goals of the project

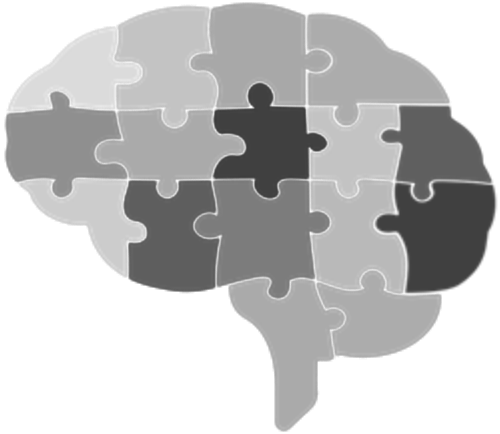



Thank you

Mike Murray
Mike.Murray@generac.com

POWER FORWARD
2025 ANNUAL CONFERENCE

GENERAC