Microgrid Deployment in Puerto Carreño (Colombia): A Pilot Project

Camilo A. Cortés, Ph.D.

Full Professor - Universidad Nacional de Colombia
Director of External Affairs

Microgrids
and Energy Storage
EMC-UN RESEARCH GROUP

Emc un RESEARCH GROUP | UNIVERSIDAD NACIONAL DE COLOMBIA

Universidad Nacional de Colombia

Microgrids and Energy Storage
EMC-UN RESEARCH GROUP

Since 1867, the National University of Colombia has been the first and largest public university in Colombia. Its mission is to promote access to quality higher education for all Colombians.



Rankings

QS WORLD UNIVERSITY RANKINGS — 259

QS UNIVERSITY RANKINGS LATIN AMERICA — 12

SCIMAGO INSTITUTIONS RANKINGS — 11 LATAM 2025; 1 Colombia 2025

Optimal microgrid topology design

IEEE TRANSACTIONS ON SMART GRID, VOL. 9, NO. 6, NOVEMBER 2018 6369

Microgrid Topology Planning for Enhancing the Reliability of Active Distribution Networks

Camilo A. Cortes, *Member, IEEE*, Sergio F. Contreras, and Mohammad Shahidehpour, *Fellow, IEEE*

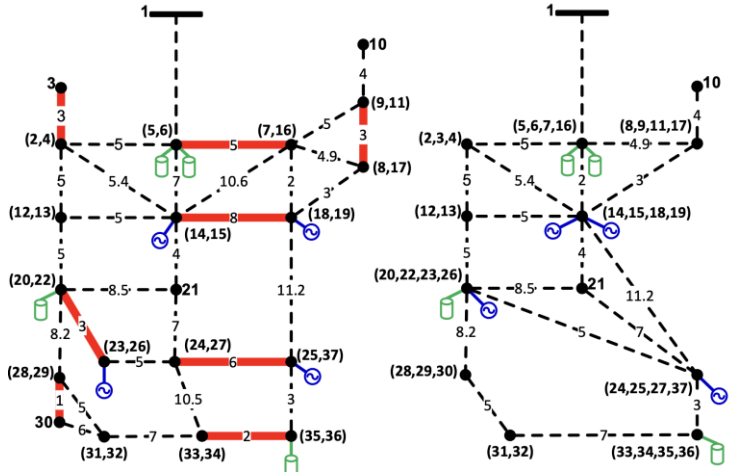

Coarsening phase

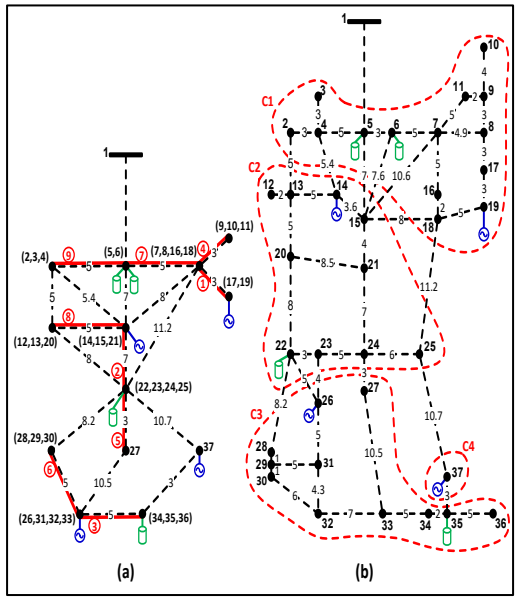

Partitioning and clustering

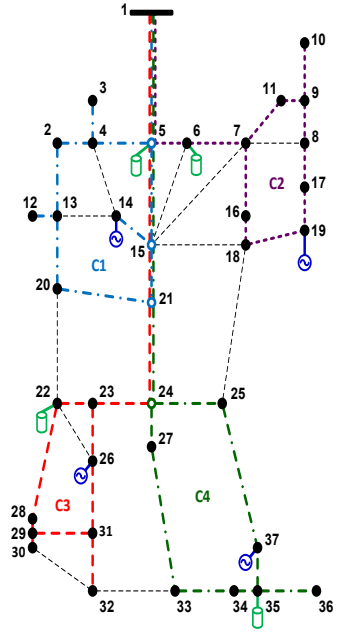

Optimal loop-based topology

Probabilistic Multi-objective Microgrids Planning

Universität Bremen

Main Characteristics
POMMP methodology

Microgrids planning strategies

- Multi-objective approach
  - F1. Residual active power maximization
  - F2. Investment and operation cost minimization
  - F3. Power losses minimization
- Probabilistic approach for the uncertainties modelling
  - Sampling based on Monte Carlo simulation

Main Characteristic
POMMP2 methodology

+

- Holistic planning of DERs and topology
  - Multi-level graph partitioning strategy
  - **Networked microgrids** in the MV distribution network

Contreras, S. F., Cortes, C. A., & Myrzik, J. M. (2019). **Optimal microgrid planning for enhancing ancillary service provision.** *Journal of Modern Power Systems and Clean Energy*, *7*(4), 862-875.

Contreras, S. F., Cortés, C. A., & Myrzik, J. M. (2020). **Probabilistic multi-objective microgrid planning methodology for optimizing the ancillary services provision.** *Electric Power Systems Research*, *189*, 106633.

Design and implementation of microgrids to guarantee the quality of supply in critical loads of Vichada

Agency

National royalties system

36 months (starting August. 2021)

Budget

$1.999.355.566 (USD 600.000)

Team

UNAL

- EMC-UN
- PAAS
- Grupo de investigación en ciencias de la orinoquia

Department of Vichada

Electrovichada E.S.P.



Puerto Carreño, Vichada (Colombia)

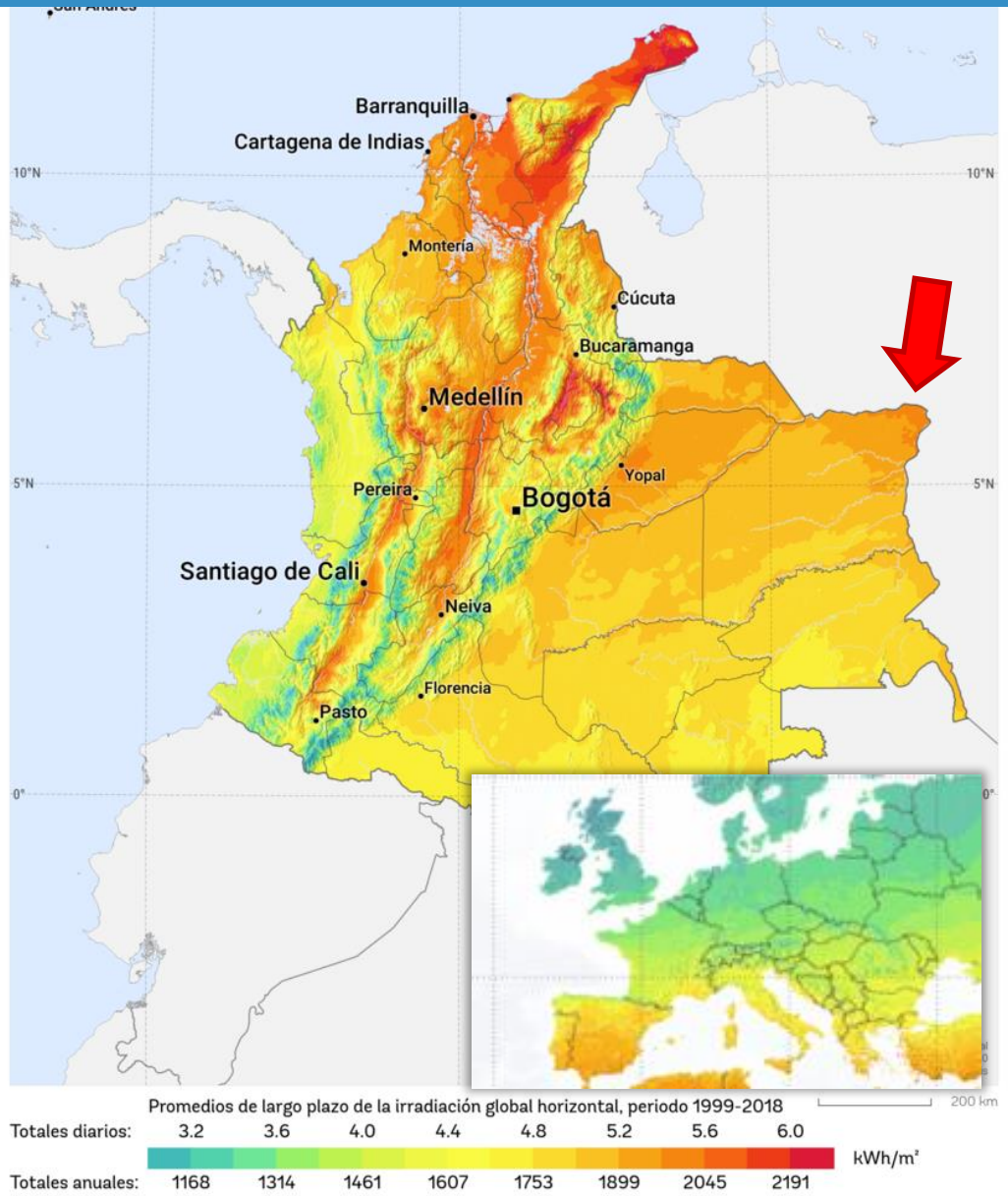

Colombia Solar resource map (Horizontal Irradiation)



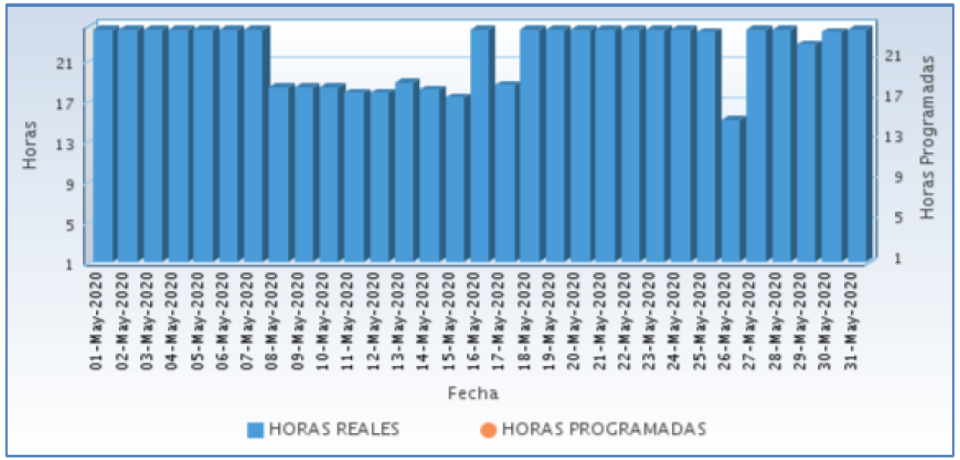

Average daily electricity availability of 21h 56m (in 2020)

Puerto Carreño in 2018-2020

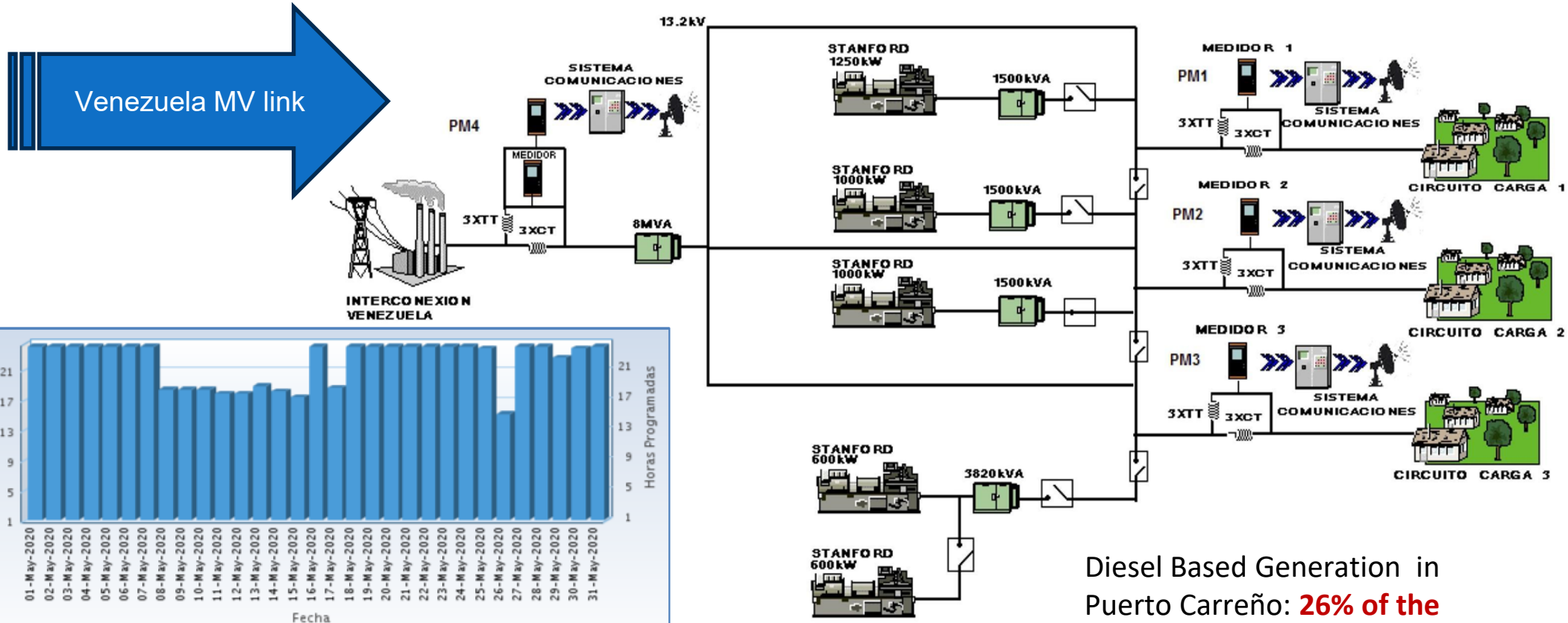

Average daily availability of 21h 56m.

Diesel Based Generation in Puerto Carreño: **26% of the consumed energy in** May 2020.



Puerto Carreño in 2021-present

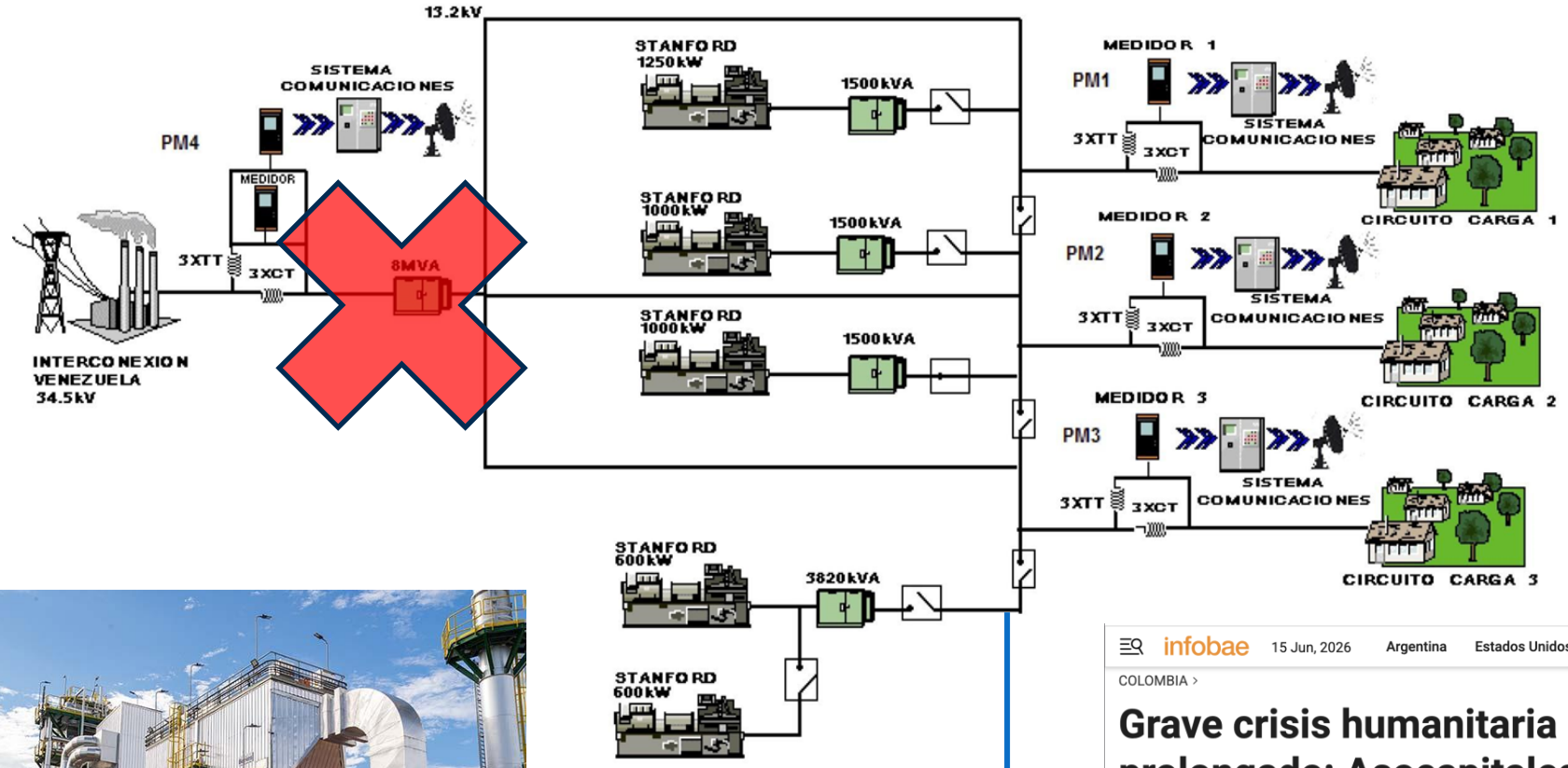



Refoenergy

Hybrid generator:

- 4.5 MW Biomass plant
- 4x1.5 MW of diesel generators

infobae 15 Jun, 2026 Argentina Estados Unidos Colombia España México Perú Centroamérica Mundo

COLOMBIA ›

Grave crisis humanitaria en Vichada por apagón prolongado: Asocapitales advierte riesgos y exige intervención urgente del Gobierno

Puerto Carreño, capital del departamento, enfrenta racionamientos de energía desde hace más de un mes, situación que afecta servicios esenciales, instituciones públicas, comercio y seguridad de cerca de 30.000 habitantes

Por **Licsa Gómez**

Agregar Infobae en

12 Mar, 2026 06:54 p. m. EST

Guardar

Possible places with critical loads

What is a critical load?

San Juan de Dios Hospital



Offices of the Vichada Governor's building



Police headquarters



Schools



Characterize the critical loads





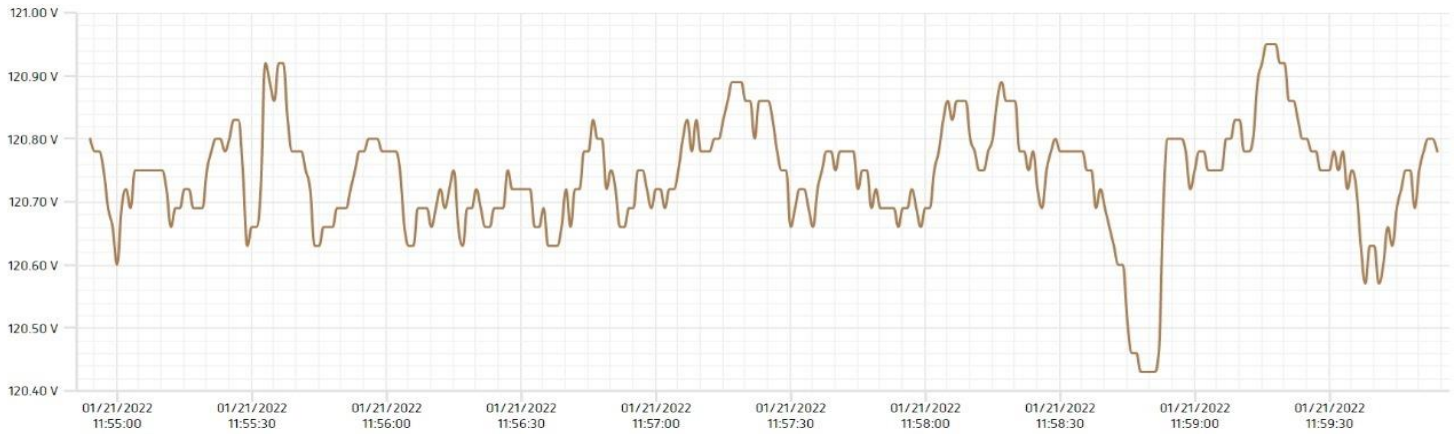

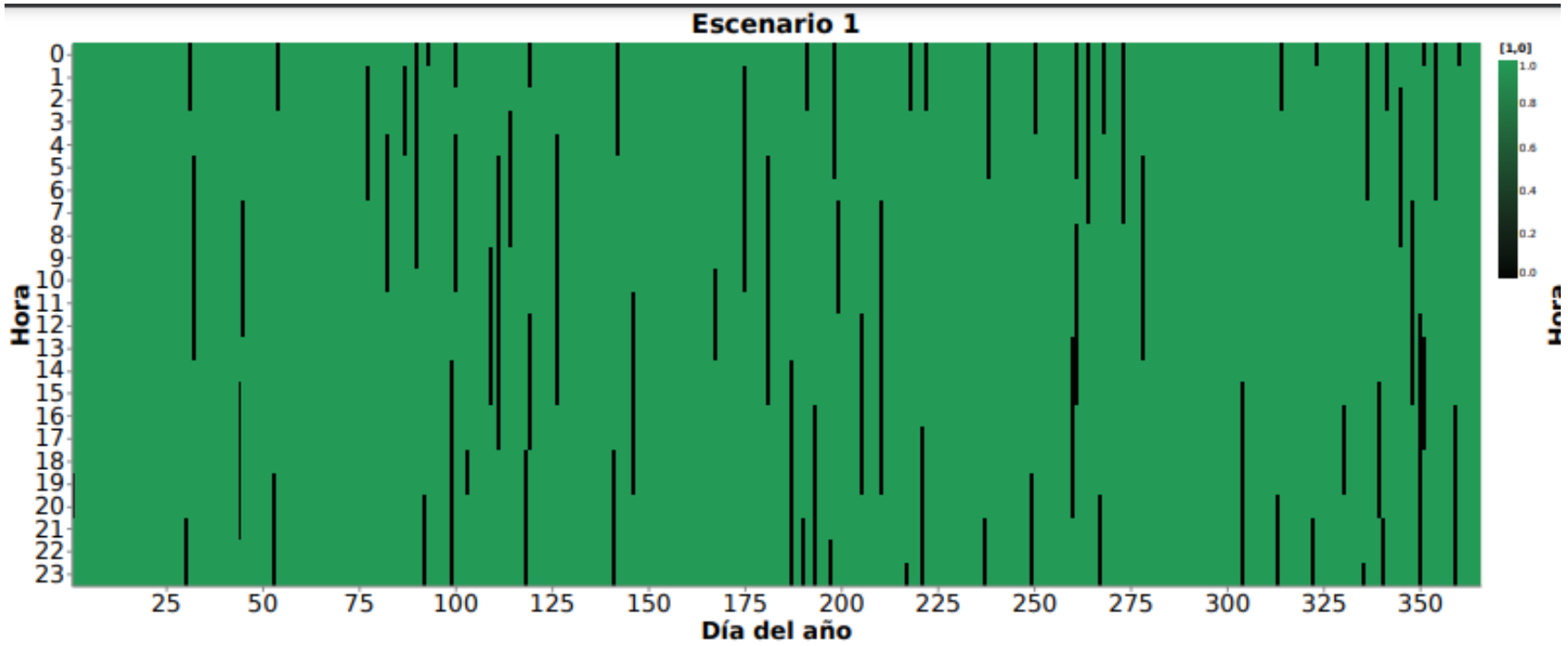

Characterize the critical loads

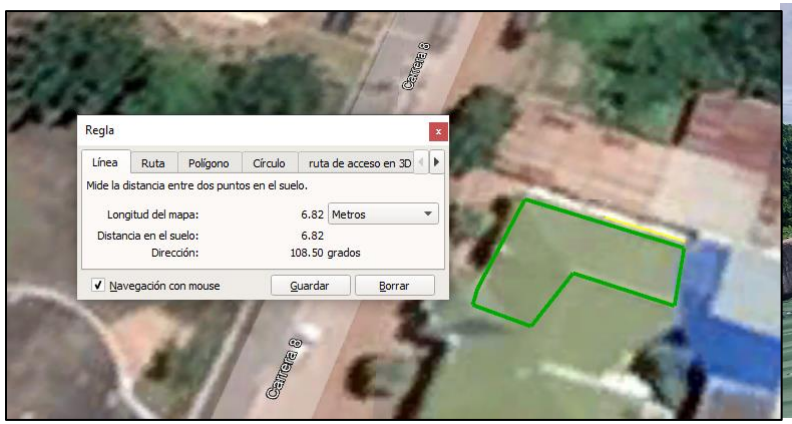



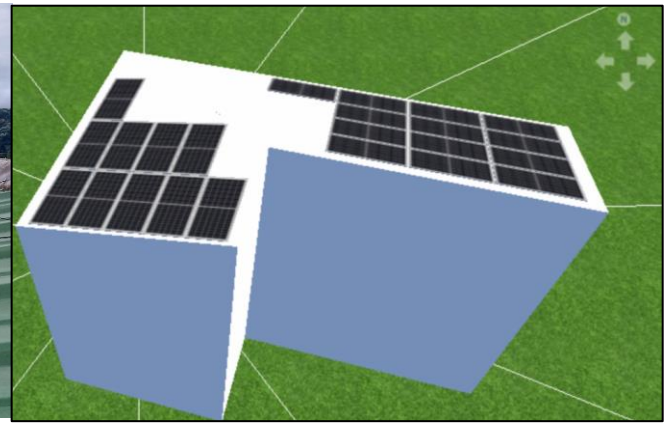





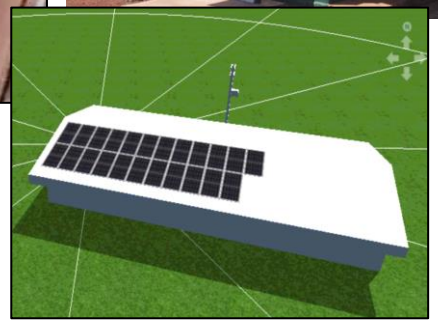



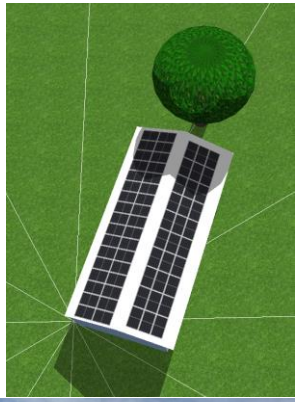



Tool for optimal sizing of hybrid microgrids PV/Battery/Wind/Diesel and hybrid inverters (MIDOTIC)

- A tool with a graphical interface was developed where the user can enter all the parameters of the microgrid

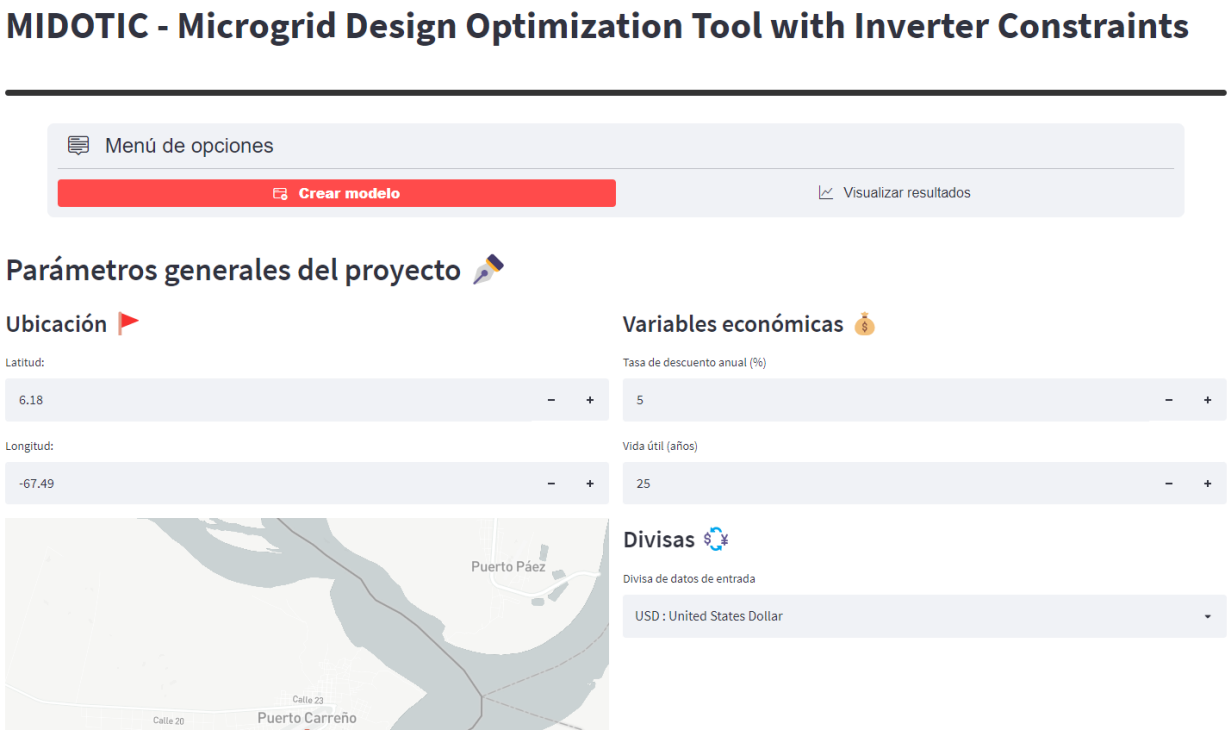

- The user can choose a desired microgrid topology and the different equipment that will compose it.

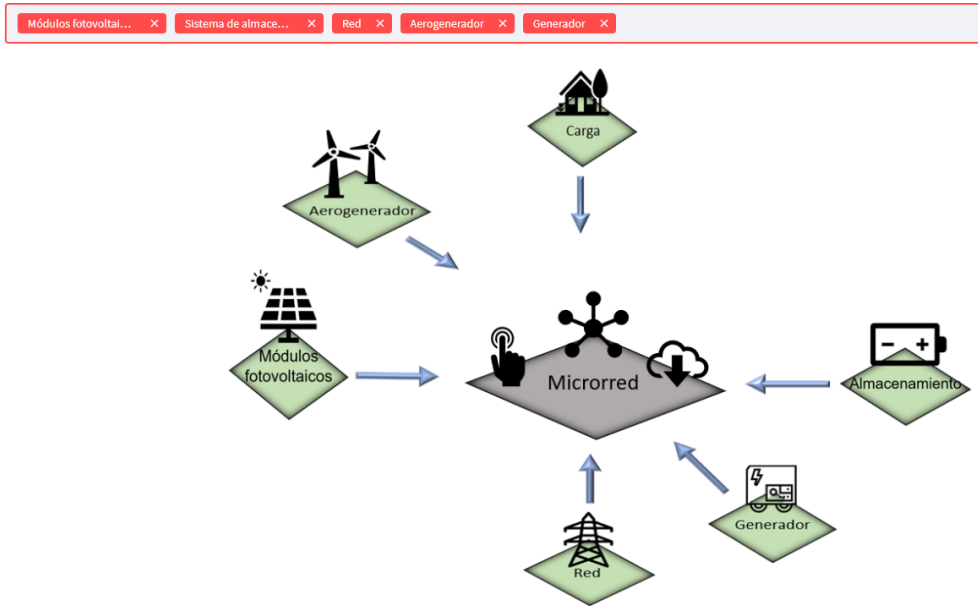

León, L. M., Romero-Quete, D., Merchán, N., & Cortés, C. A. (2023). **Optimal design of PV and hybrid storage based microgrids for healthcare and government facilities connected to highly intermittent utility grids**. *Applied Energy*, *335*, 120709.

Tool for optimal sizing of hybrid microgrids PV/Battery/Wind/Diesel and hybrid inverters (MIDOTIC)

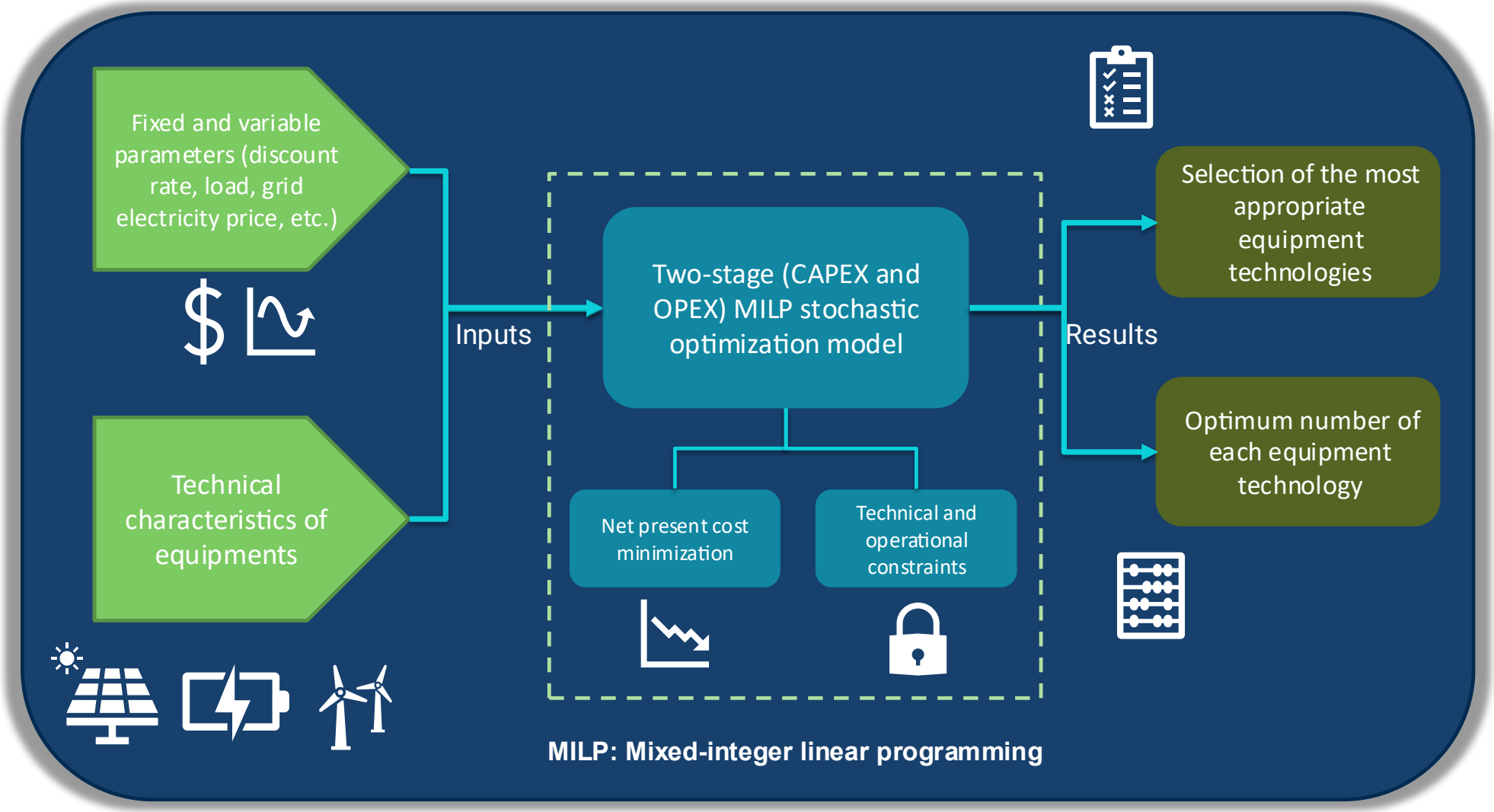

León, L. M., Romero-Quete, D., Merchán, N., & Cortés, C. A. (2023). **Optimal design of PV and hybrid storage based microgrids for healthcare and government facilities connected to highly intermittent utility grids**. *Applied Energy*, *335*, 120709.

Tool for optimal sizing of hybrid microgrids PV/Battery/Wind/Diesel and hybrid inverters (MIDOTIC)

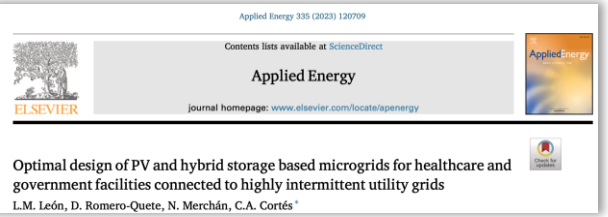

Table 1
Summary of relevant sizing formulations in the current literature.

Ref	ESS degradation	Effect of weather variables and solar panels installation	Different equipment per technology	Replacement of equipment over the MG lifetime	Intermittencies in the main grid	HESS for battery lifetime improvement	Optimization method
[4]	Not	Only weather	Not	Not	Not	Not	SCIP for MILP
[5]	Not	Only weather	Yes	Not	Yes	Not	GLPK for MILP
[6]	Not	Not	Not	Not	Not	Not	CPLEX for MILP
[7]	Not	Yes	Not	Not	Not	Not	CPLEX for MILP BARON for MINLP
[11]	Yes	Does not size panels	Yes	Yes	Not	Not	CPLEX for MILP
[12]	Yes	Yes	Not	Yes	Yes	Not	Simulation-based
[17]	Not	Does not size panels	Yes	Not	Not	Yes	Gradient-based constrained Genetic algorithm
[19]	Not	Not	Not	Not	Not	Yes	Not metioned for MINLP
[24]	Not	Only weather	Not	Not	Not	Not	GO algorithm
[25]	Not	Not	Not	Not	Not	Not	PSO Algorithm
[27]	Not	Not	Not	Not	Not	Not	Not mentioned for MILP Genetic algorithm
[26]	Not	Only weather	Not	Not	Not	Not	PSO Algorithm
[28]	Not	Only weather	Not	Not	Not	Not	CPLEX for MILP
[29]	Yes	Only weather	Not	Not	Not	Not	CPLEX for A-AUGMECON2
[30]	Not	Not	Not	Not	Not	Not	Not metioned for MILP
[31]	Not	Not	Not	Yes	Not	Not	Multiple Design options PSO
[32]	Yes	Only Weather	Yes	Yes	Yes	Not	Not mentioned for MILP Heuristic design algorithm (HA)
This paper	Yes	Yes	Yes	Yes	Yes	Yes	CPLEX for MILP

Tool for optimal sizing of hybrid microgrids PV/Battery/Wind/Diesel and hybrid inverters (MIDOTIC)

- Once the model is optimized, the user can visualize various variables and an economic analysis of the project

- Results of the optimal number of equipment and the total initial investment



Tecnología	Valor unitario: USD	Número a instalar	Total: USD	Potencia total [kW]
FK-3kW	1900	-0.0	-0.0	-0.0
FX-400	700	-0.0	-0.0	-0.0
FX-1000	1100	12.0	13200.0	12.0

Costo total de turbinas eólicas

13200.000 USD

Tecnología	Valor unitario: USD	Número a instalar	Total: USD	Energía total [kWh]
PylonTech-UP5000	2215	2.0	4430.0	9.6
NCL-50Ah	1168	0.0	0.0	0.0

Costo total de baterías

4430.000 USD

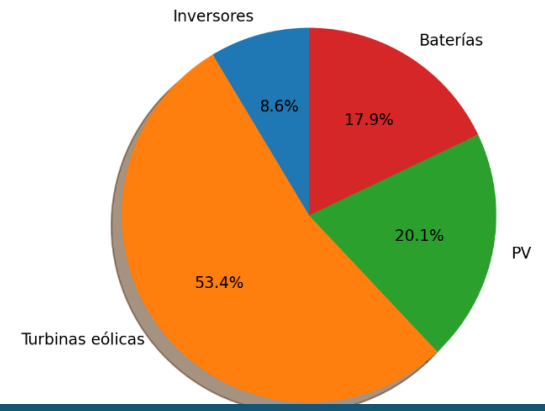

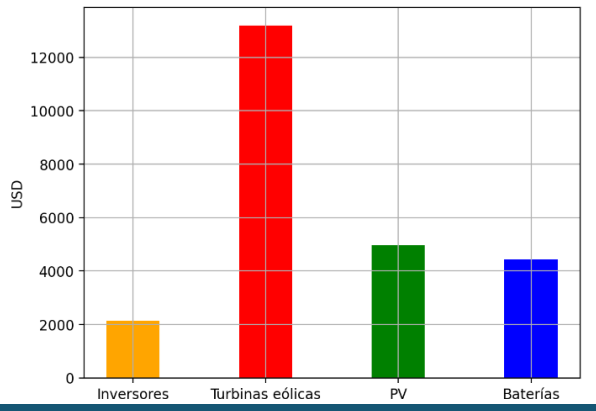

Emc un RESEARCH GROUP | UNIVERSIDAD NACIONAL DE COLOMBIA

Ultracapacitor or Supercapacitor



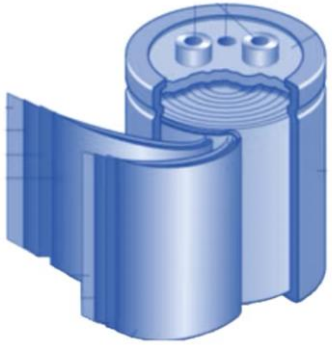

A long-lasting energy storage device that can store and release electrical energy faster than a battery

Energy storage in the electrical field (electrostatic reaction)

- Very High efficiency (up to 99%)
- Longer life than a battery (1 Million of charge/discharge cycles)

- Low energy density

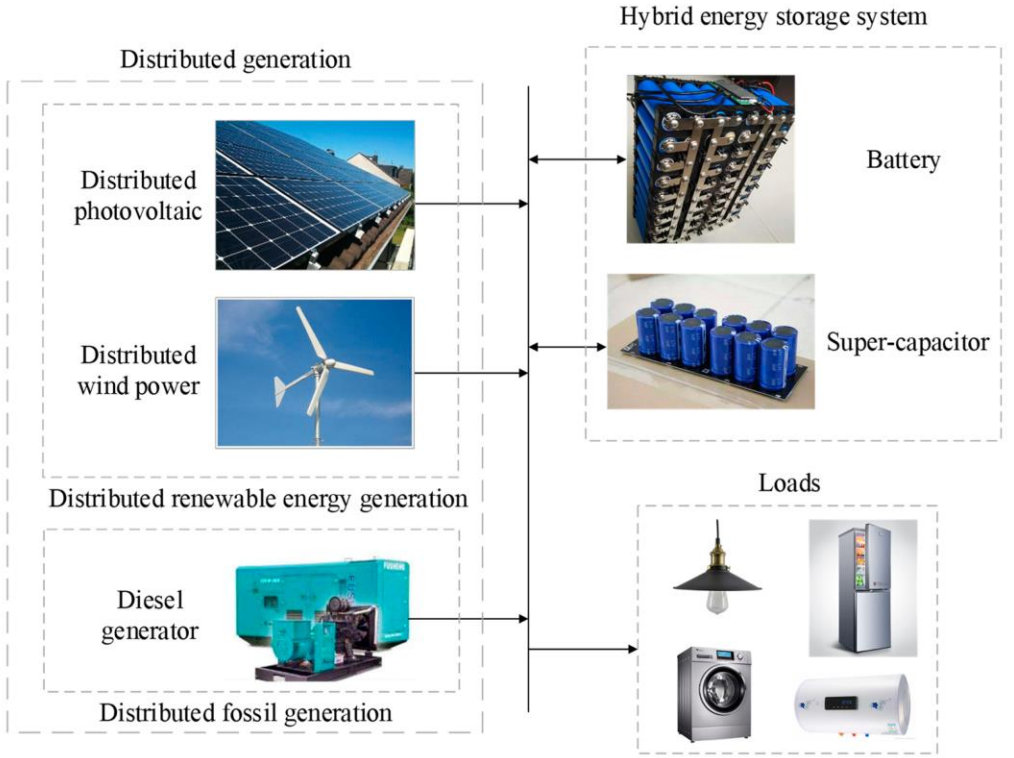

Use of Supercapacitors in MGs – Hybrid Storage

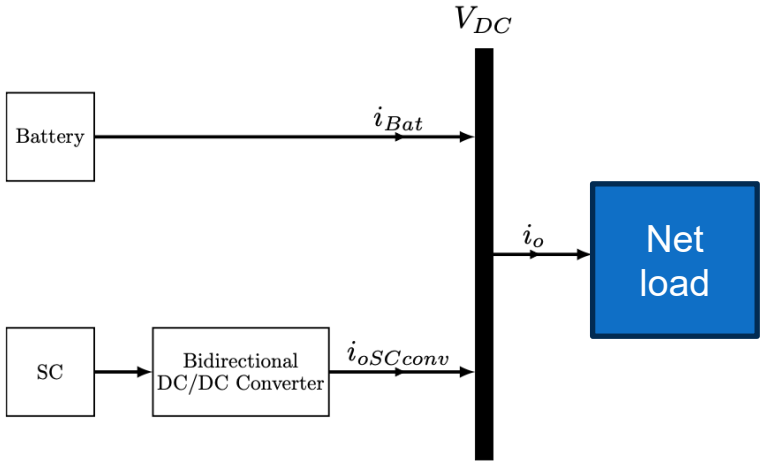

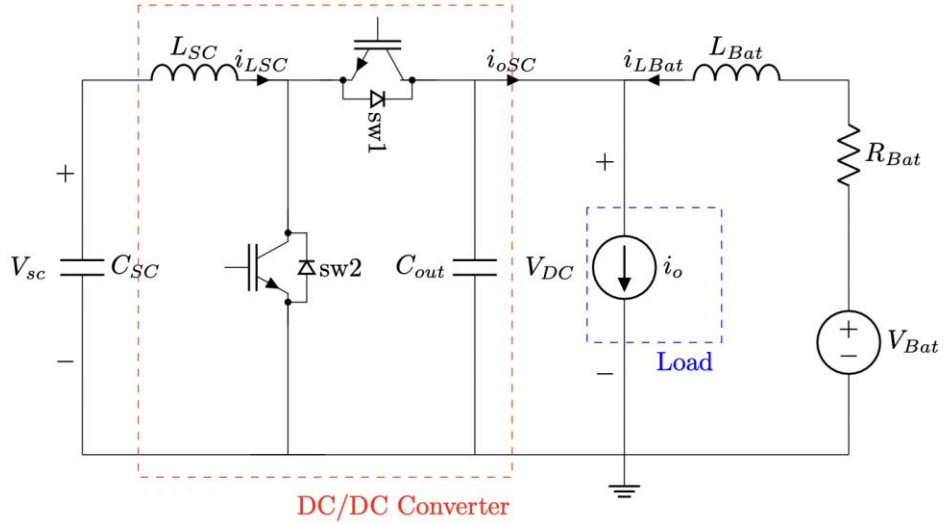

Figure 2. HESS model in semi-active topology.

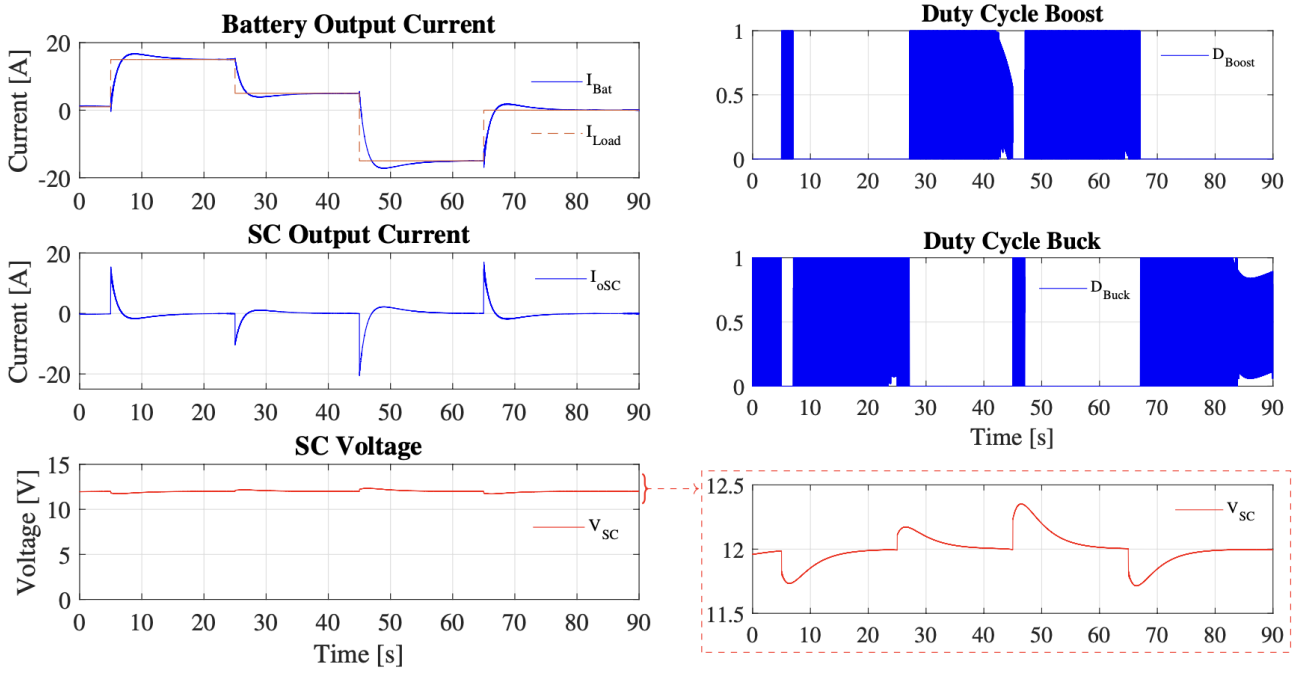

Fracica-Rodriguez, F., Acevedo-Iles, M., Romero-Quete, D., Martinez, W., & Cortes, C. A. (2024). **Passivity-Based Control for Transient Power Sharing and State of Charge Restoration in a Semi-Active Supercapacitor-Battery System**. *Batteries*, *10*(9), 322.

Use of Supercapacitors in MGs – Hybrid Storage

- Test of ideas in Hardware- and control-in-the-loop environments with real-time simulators

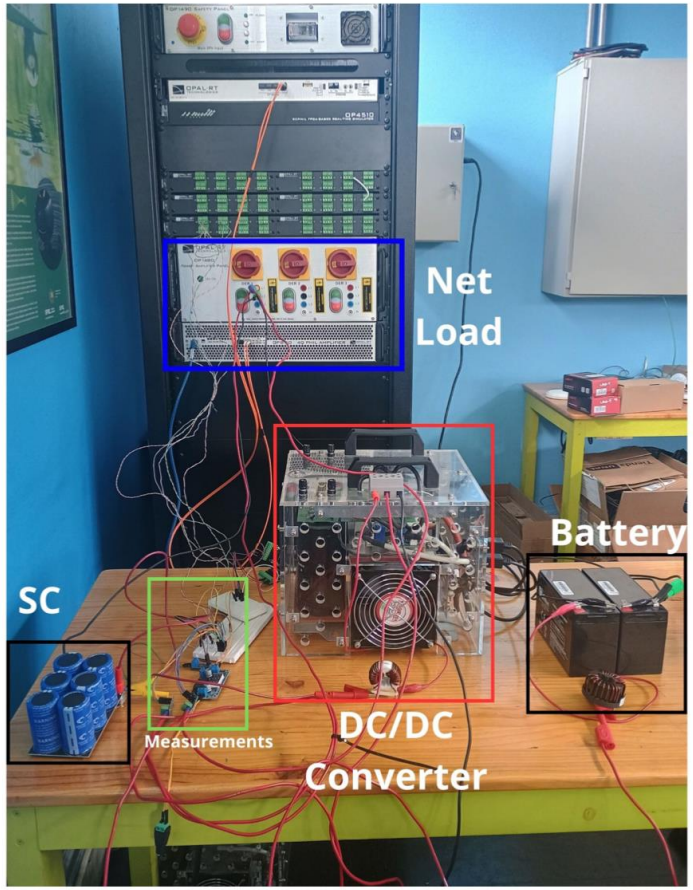

Figure 6. Experimental setup.

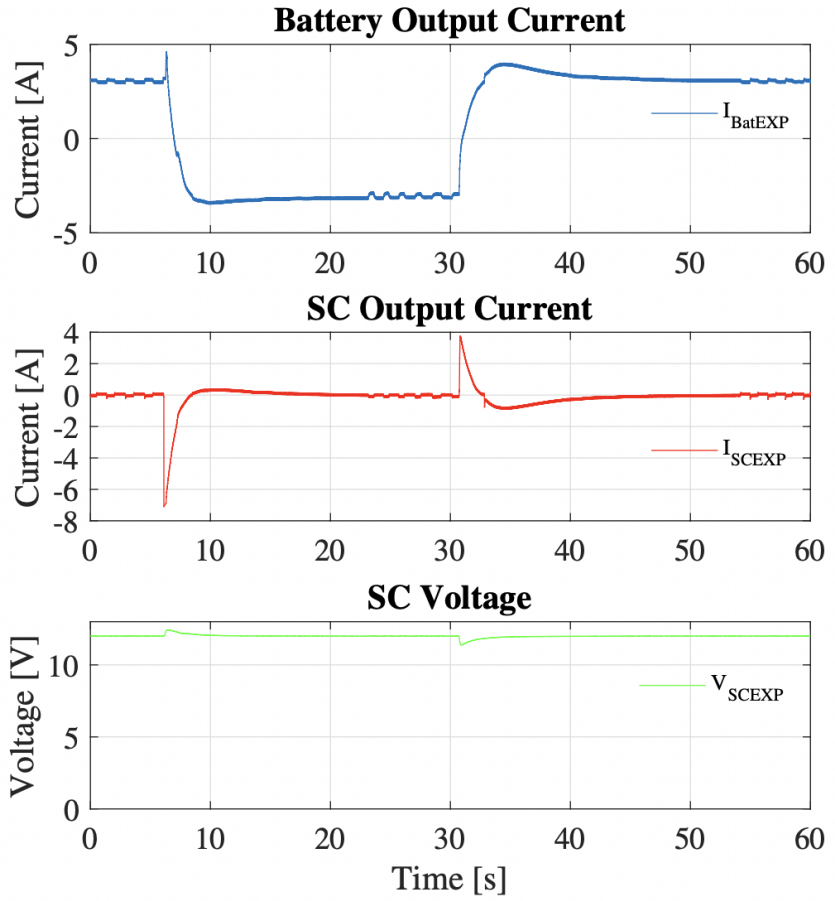

Figure 10. PHIL validation result with SoC Restoration.

Fracica-Rodriguez, F., Acevedo-Iles, M., Romero-Quete, D., Martinez, W., & Cortes, C. A. (2024). **Passivity-Based Control for Transient Power Sharing and State of Charge Restoration in a Semi-Active Supercapacitor-Battery System**. *Batteries*, *10*(9), 322.

Use of Supercapacitors in MGs – Hybrid Storage

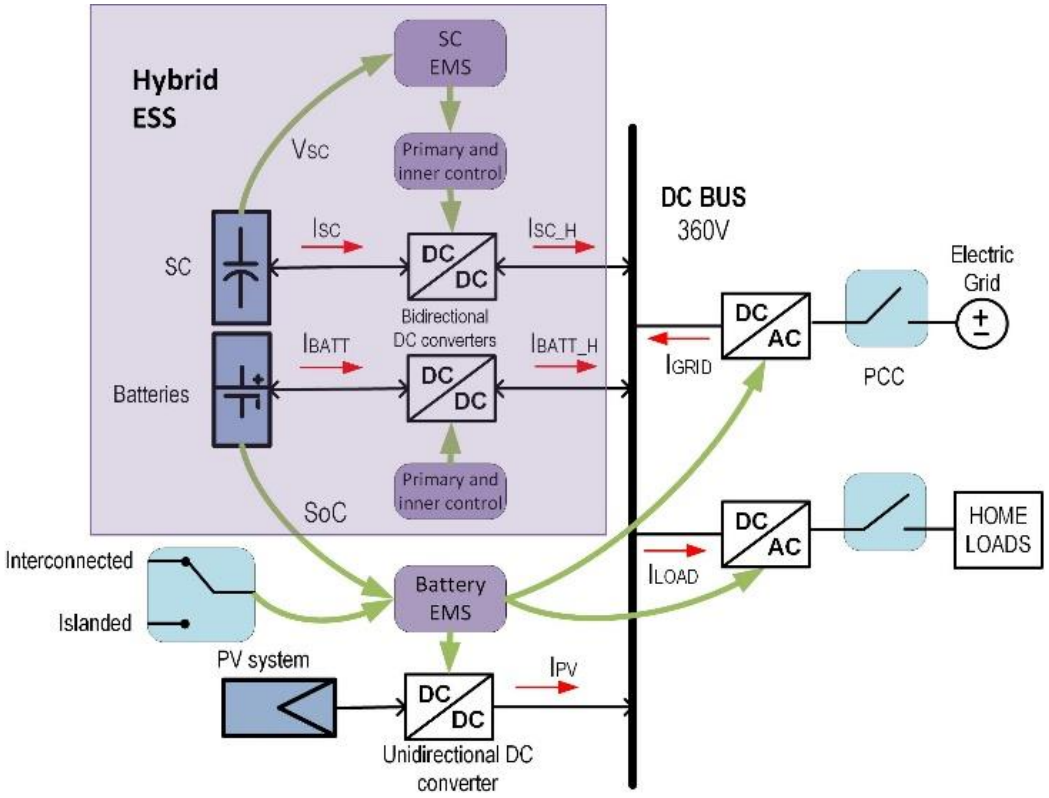

Structure of the proposed EMS in the DC microgrid under study

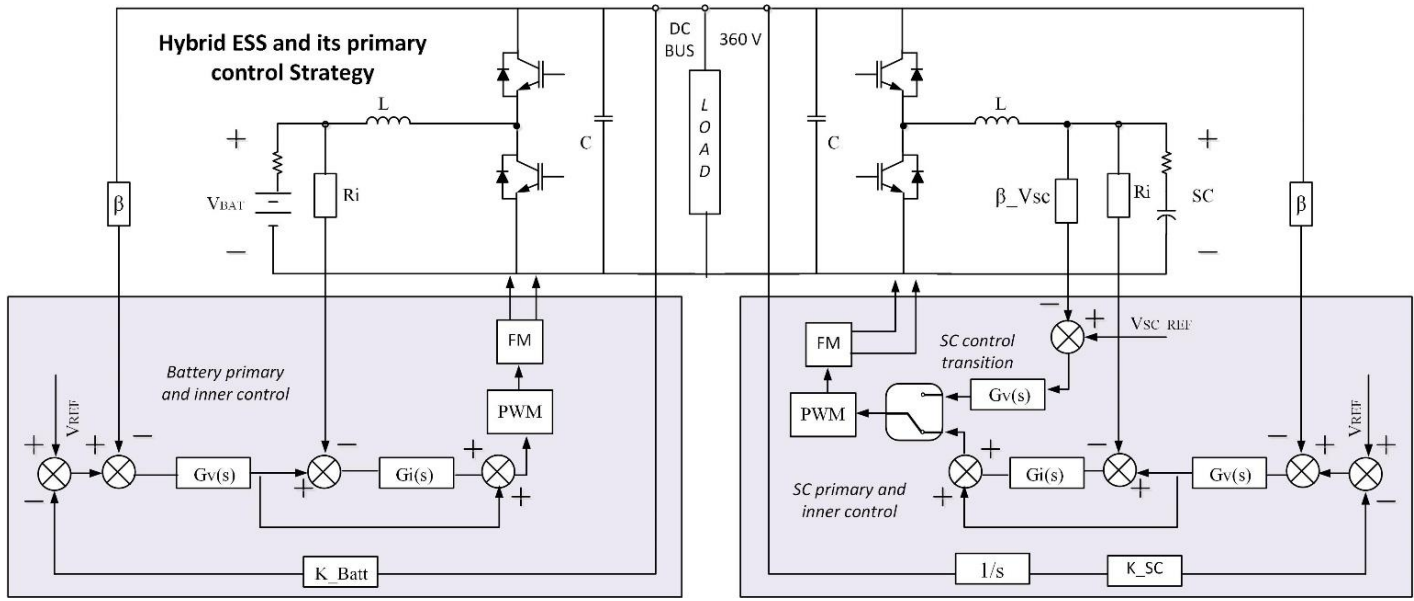

The active parallel topology with the implemented primary control strategy. The control topology and controllers remains the same in both islanded or interconnected microgrid operation mode

Narvaez, A., Diaz, N., Cortes, C. A., Trujillo, C., & Luna, A. (2026). **Rule-based Energy Management System for Battery- Supercapacitor Hybrid Energy Storage System in Microgrids**. Paper in evaluation in *Journal of Energy Storage*.

Hybrid Storage Storage System

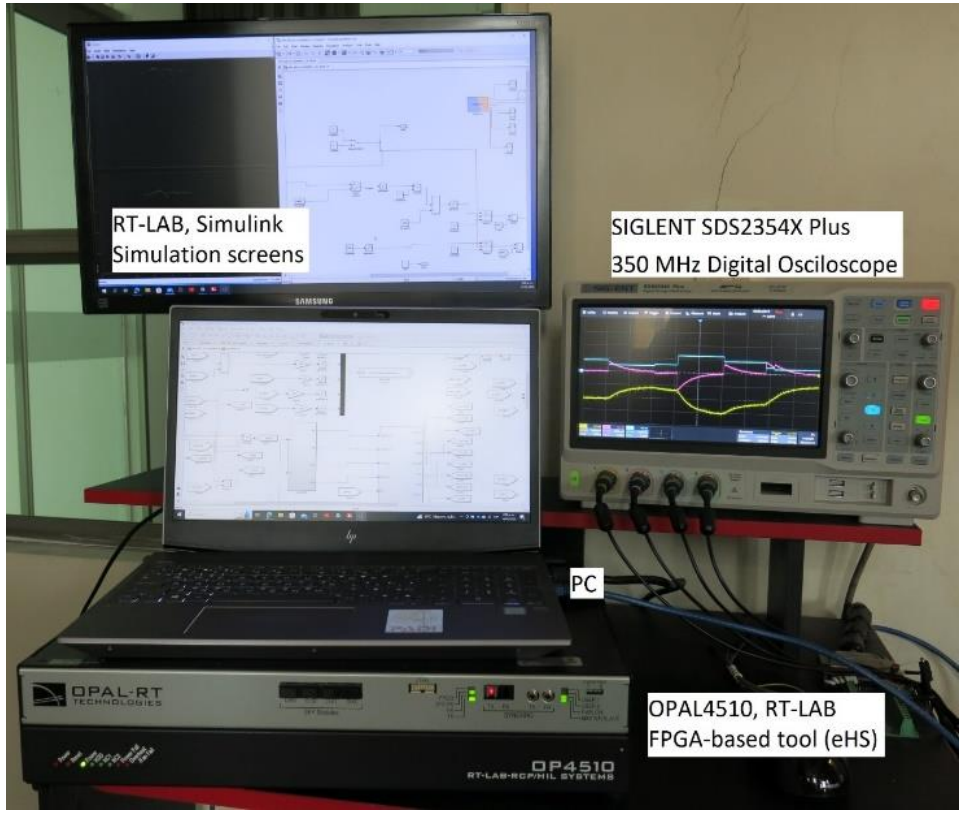

Experimental setup for the HIL Real time simulations

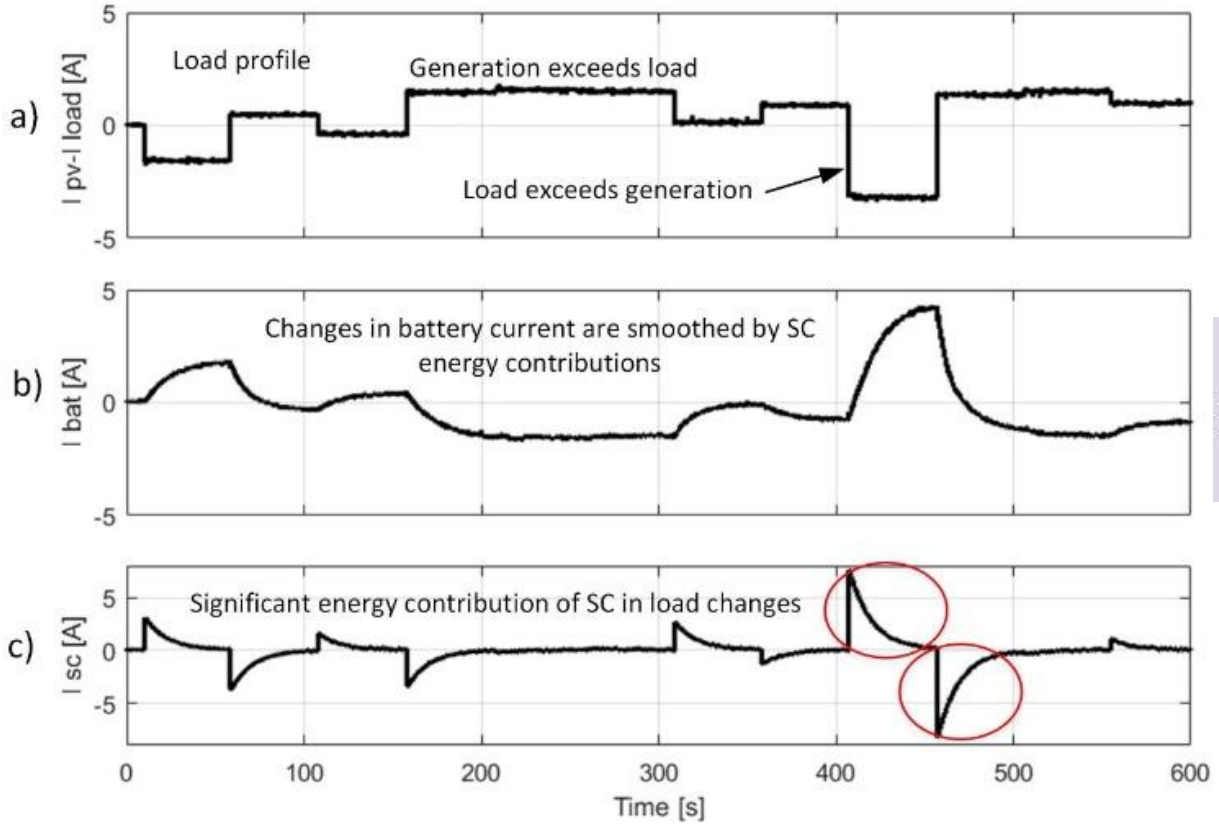

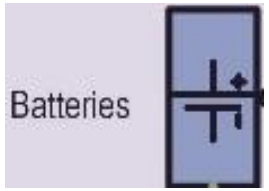

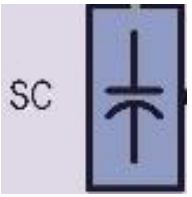

Simulation plots for a HESS in a microgrid islanded mode

Narvaez, A., Diaz, N., Cortes, C. A., Trujillo, C., & Luna, A. (2026). **Rule-based Energy Management System for Battery- Supercapacitor Hybrid Energy Storage System in Microgrids**. Paper in evaluation in *Journal of Energy Storage*.

Microgrids Prototypes

Bogota Campus (2600 m.a.s.l.)





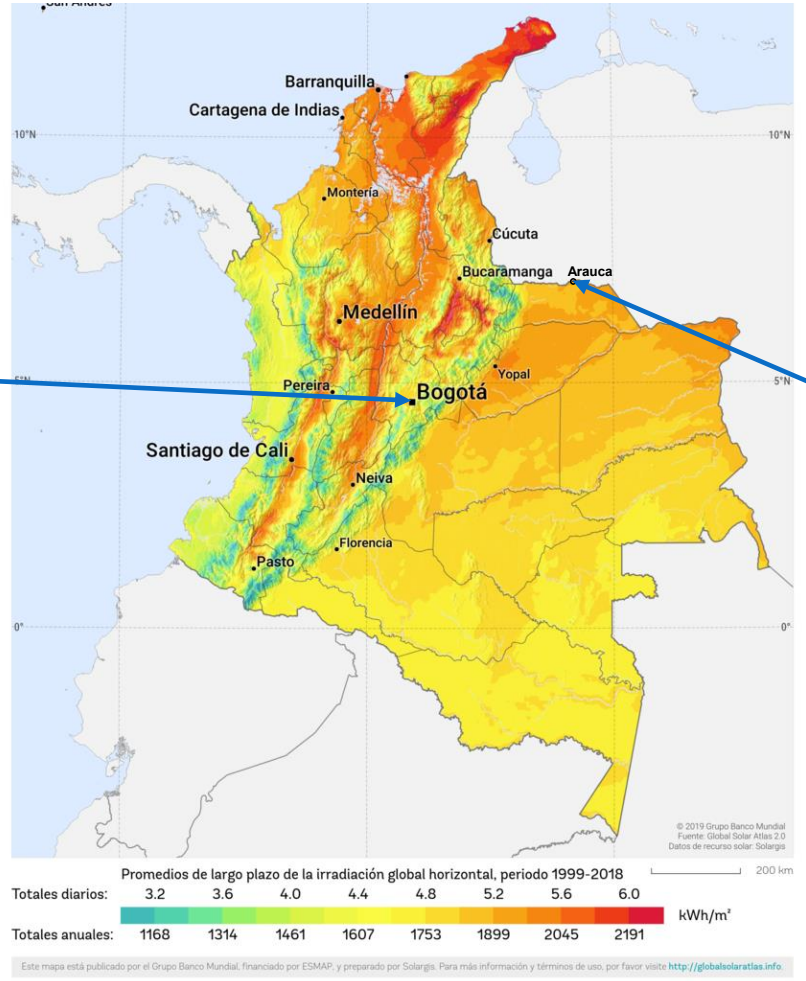

Orinoquia Campus (125 m.a.s.l.)



Microgrids in Puerto Carreño

San Juan de Dios Hospital



- 10 KVA Microgrid





Offices of the Vichada Department



- 5 KVA Microgrid





Jose Eustasio Rivera School



- 5 KVA Microgrid

Microgrids Project in Puerto Carreño for critical loads

ELSEVIER
Applied Energy
Volume 335, 1 April 2023, 120709

Optimal design of PV and hybrid storage based microgrids for healthcare and government facilities connected to highly intermittent utility grids

L.M. León, D. Romero-Quete, N. Merchán, C.A. Cortés





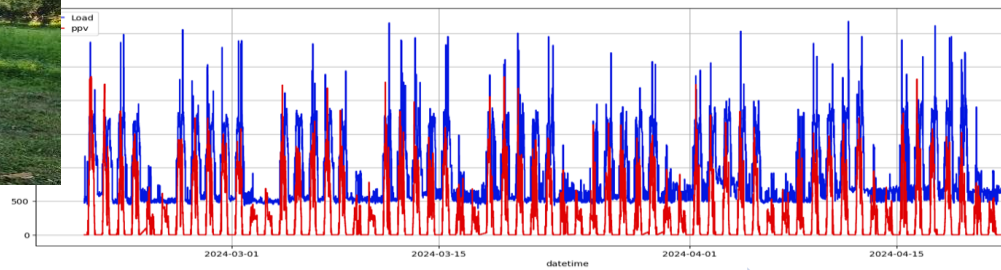

Design tools for MGs

Development of MG prototypes and optimal design of MGs

MGs monitoring and setting

November 2021 — **January 2022** — **June 2023** — **December 2023** — **September 2024**

Measurement campaign



Deployment of 3 MGs in Puerto Carreño



Project social impact



UNIVERSIDAD
NACIONAL
DE COLOMBIA

Microgrid Deployment in Puerto Carreño (Colombia): A Pilot Project

Thank you!

Questions?

Prof. Camilo A. Cortés
caacortesgu@unal.edu.co