Demonstration of Protection Strategy for Unplanned Islanding Detection in Microgrids

Luiza Higino S. Santos [1] José Carlos U. Peña[2] José Gomes de Matos[3] Marcos J. Rider[1]
Luiz Carlos P. da Silva[1] José Antenor Pomilio[1]
[1] UNICAMP, [2] Kema Labs, [3] UFMA

Introduction

This work demonstrates a **protection strategy** for **unplanned islanding** detection in the **CampusGrid** microgrid at the University of Campinas. Special attention is given to **grid-forming converters** operating as Virtual Synchronous Generators (**VSGs**), which can affect the performance of **conventional islanding detection** methods. The results highlight the need for **coordinated protection** and control design in converter-dominated microgrids.

CampusGrid

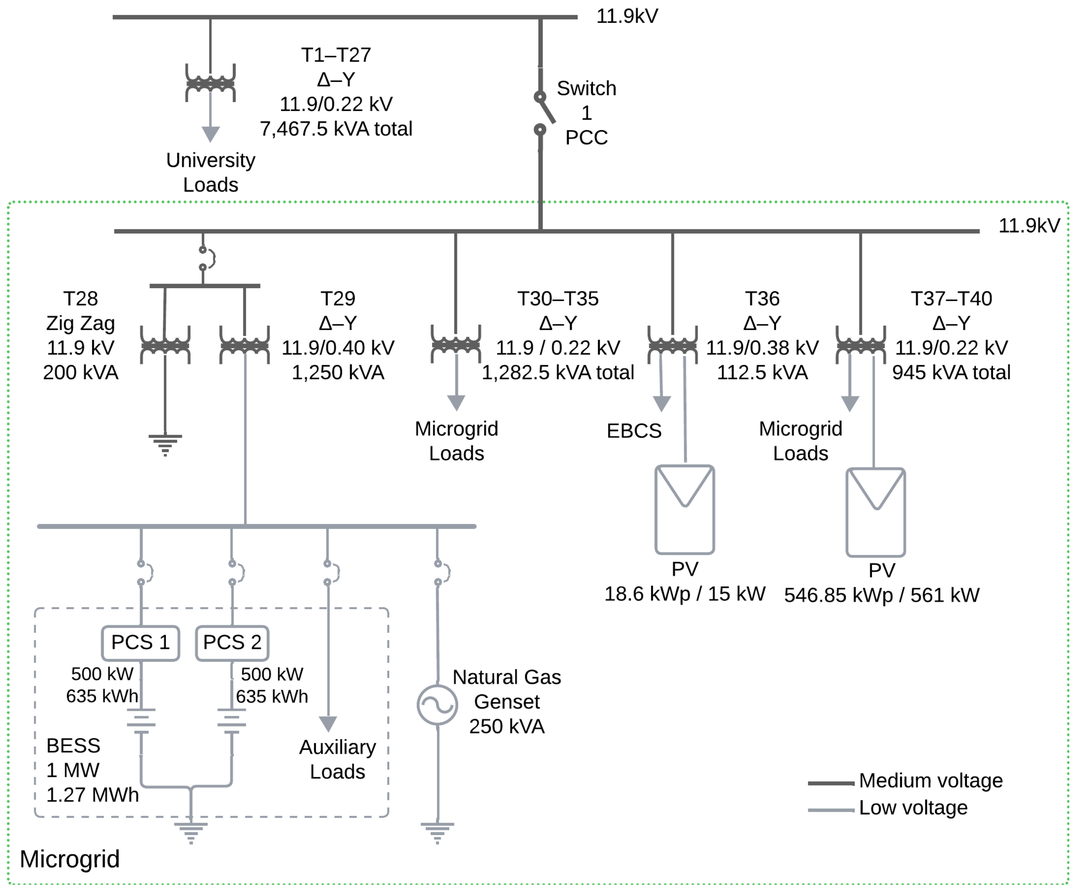

Fig. 1 – CampusGrid Single-Line Diagram [1].

Protection Philosophy

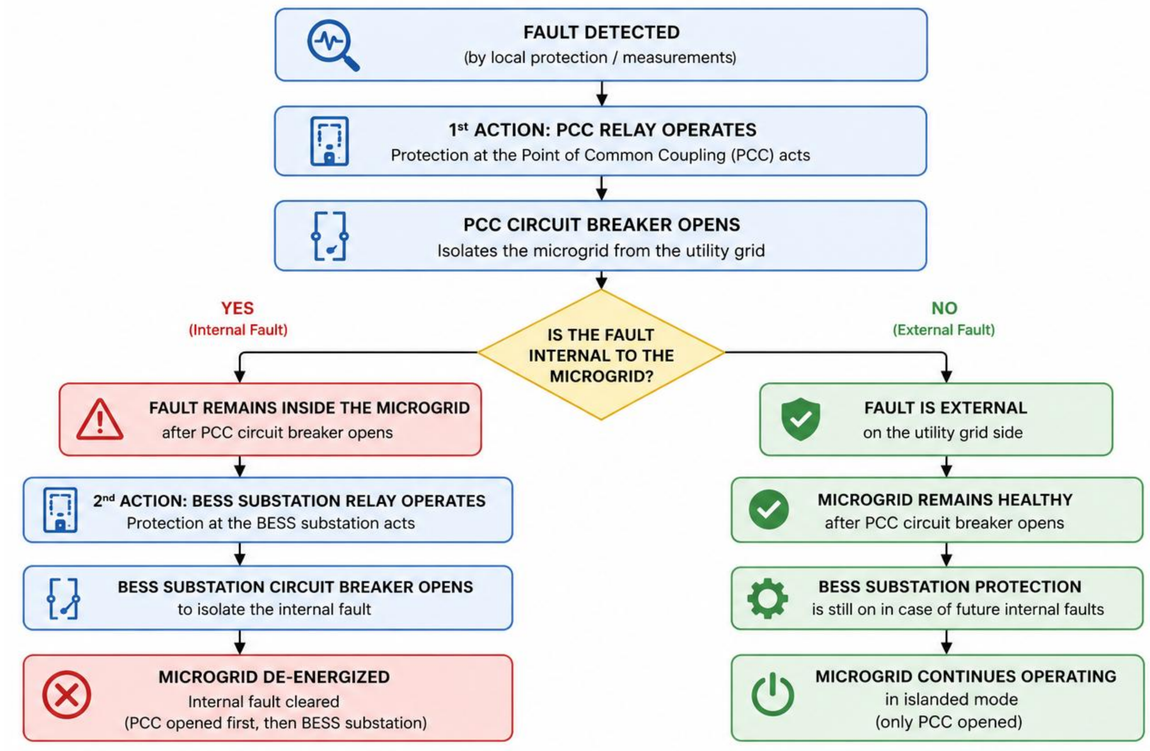

Fig. 2 – Protection Philosophy Flowchart

Key Contributions

- Demonstration in a real-world medium-voltage microgrid
- Validation of ANSI 78 for three-phase faults
- Identification of low-current fault detection limitations
- ANSI 46BC-based remote trip solution for reliable islanding

[1] Oliveira, H. A., Santos, L. H. S., Silva, J. A., Rider, M. J., Da Silva, L. C. P., & Pinheiro, L. D. P. (2025, October). **Simulation-Based Evaluation of EMS Strategies for a University Microgrid: A Real-World Case Study.** In *2025 IEEE PES Innovative Smart Grid Technologies Conference Europe (ISGT Europe)* (pp. 1-5). IEEE.

Three-Phase Faults

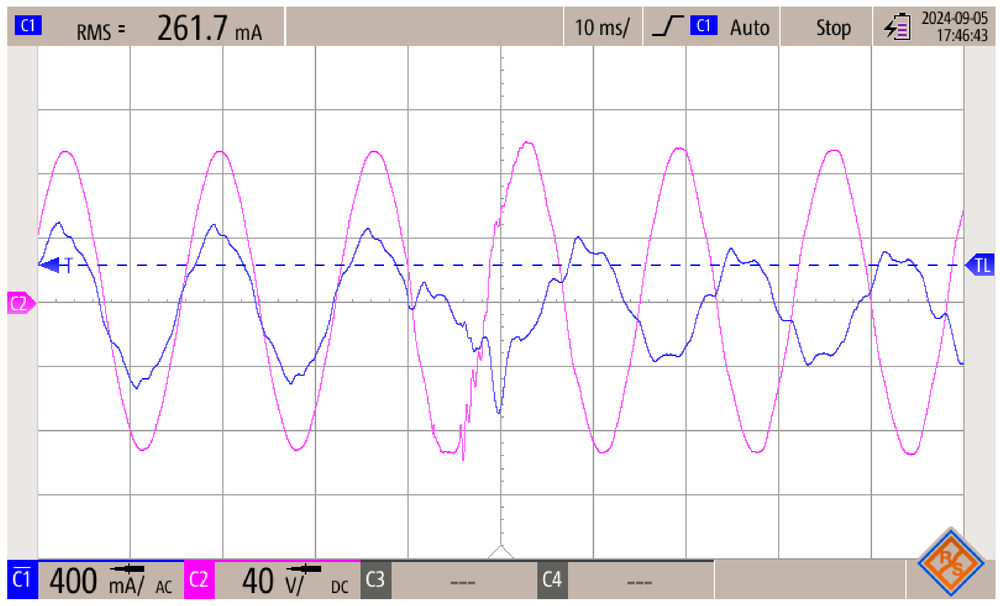

Fig. 3 – Dynamic response during the transition from grid-connected to islanded operation.

- Relay detected all upstream faults (ANSI 78 3ϕ) regardless of power flow magnitude and direction
- PCC breaker opened correctly, resulting in successful islanding

Single-Phase Faults

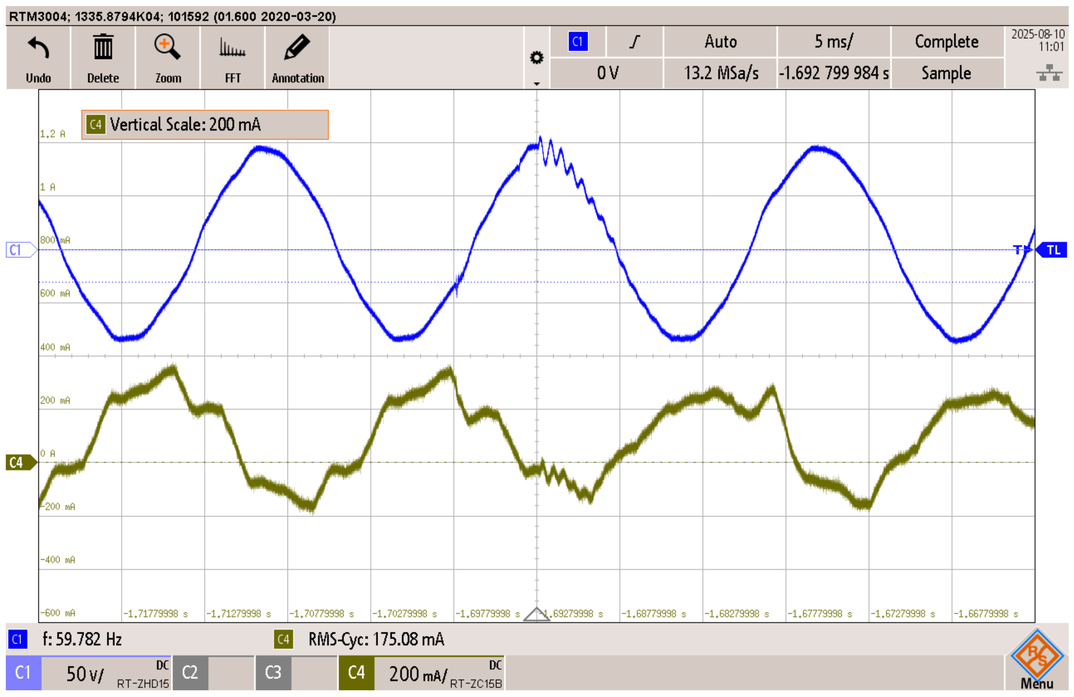

Fig. 4 – Single-phase fault upstream. PCC Power Flow -245 kW.

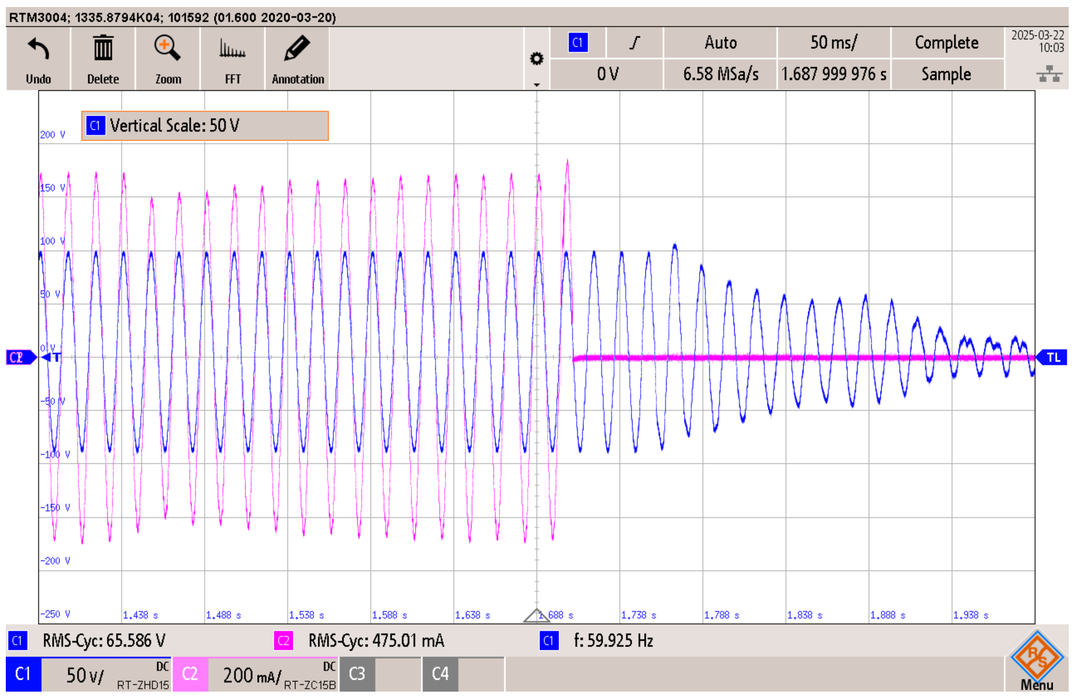

Fig. 5 – Single-phase fault upstream. PCC Power Flow -126 kW.

- ANSI 78 (1ϕ) detected islanding above 200 kW PCC power flow
- Low-current unbalances may not be detected by the PCC
- VSG maintained voltage and frequency during fault events
- ANSI 46BC remote trip enables reliable microgrid islanding

2022/03441-7

Contact