INTERNATIONAL Microgrid SYMPOSIUMS

Shift2DC

Finland 2026 Symposium on Microgrids

15-18 June 2026, Lappeenranta-Tampere



LUT University

Organized by:
Laboratory of Electricity Markets and Power Systems (LEMPS)
LUT School of Energy Systems

With support from:
Tampere University
Vaasan yliopisto

INTERNATIONAL Microgrid SYMPOSIUMS

INTERNATIONAL
Microgrid
SYMPOSIUMS

AC

Shift2DC

DC

Project Overview

SHIFT2DC Introduction

Concept

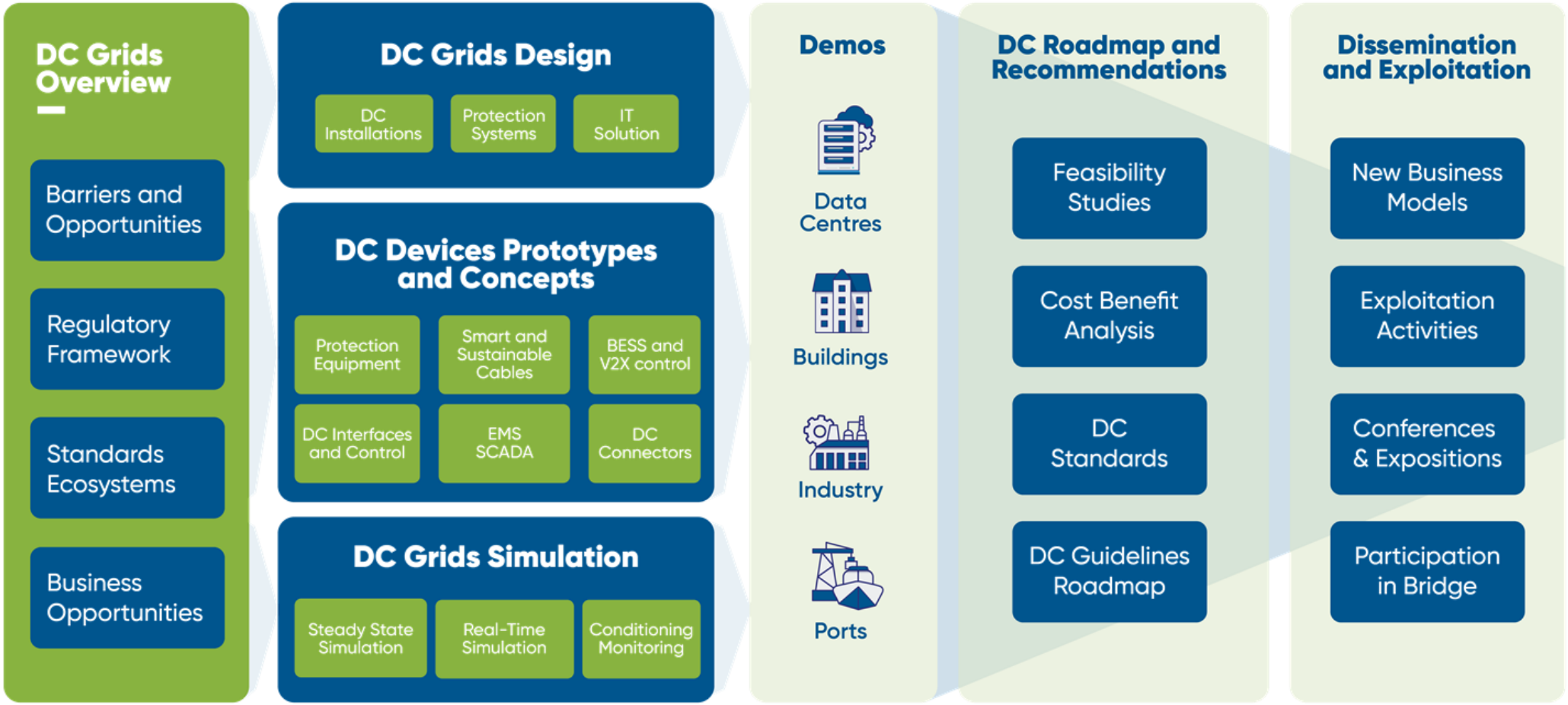

Building Demo

Location and Scope



- **Location** : Cegelec Office building (Lille)
- **Scope :**
  - 5 Offices at least (DC lighting and Computers powering)
  - PV on the roof (60kWp)
  - DC EV charging
  - Storage
  - Use case targeted : Limited use of AC grid
  - AC grid connection point power rate <50kW

Building Demo

Single Line Diagram

- Unit testing and partial system level testing performed at EDF Lab in Saclay
- Commissioning planed for July 27th

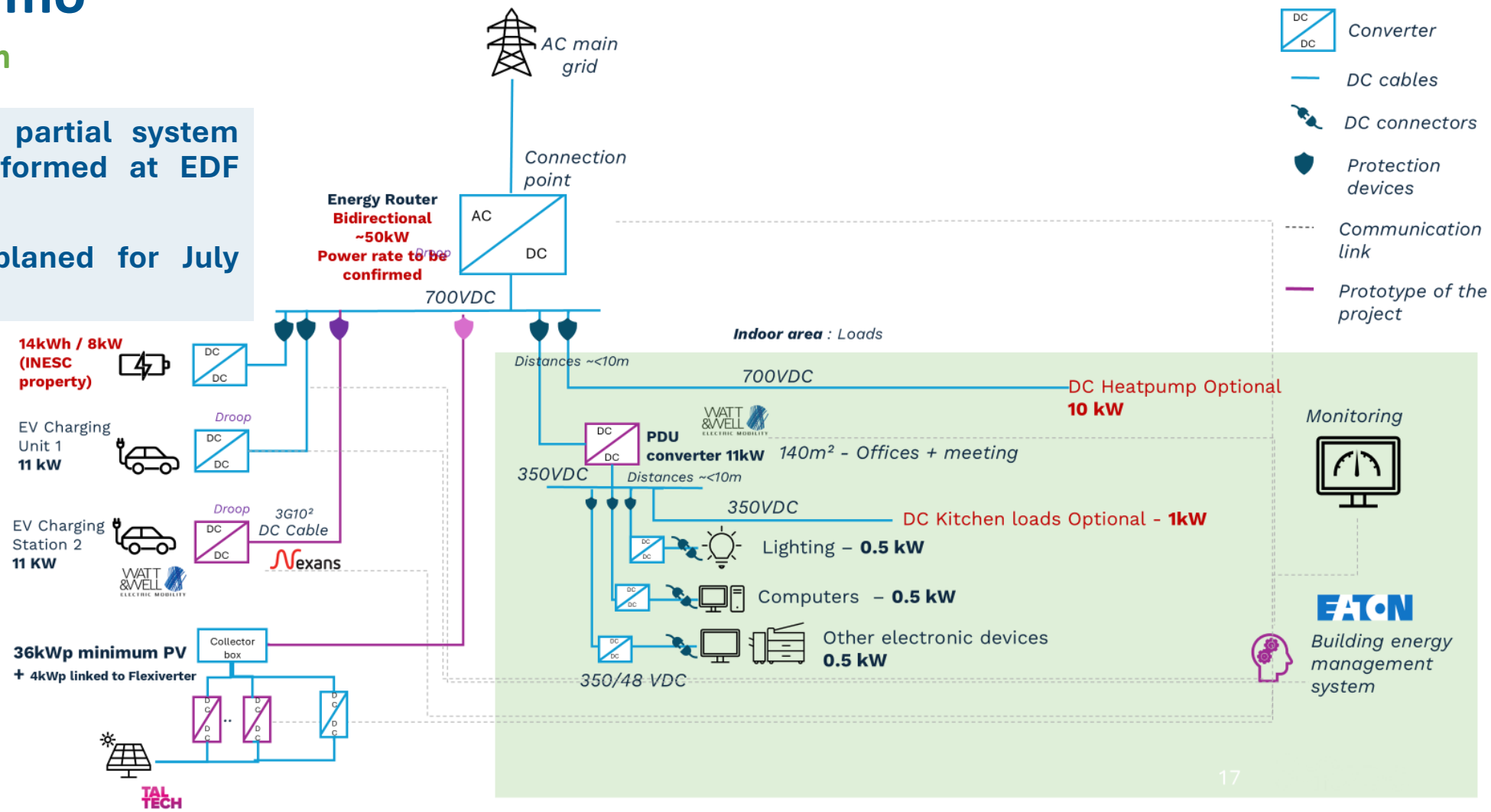

Datacenter demo
Location & hosting

Fraunhofer IISB



*Banner not yet printed

BACHMANN

- **Location**: Bachmann facilities, Germany
- **Scope :**
  - Two server rack systems
    - One with vertical power delivery + passive gravity-driven cooling;
    - One with partial power converters reducing conversion losses by ~20%)
  - Office compartment: DC-powered laptops, monitors, lighting — edge datacenter concept
  - PV directly feeding the DC grid
  - Battery system acting as UPS
  - DC EV charging station (EVSE)
  - Use cases targeted:
    - DC grid resilience (uptime / load management),
    - Data center scalability,
    - Sector coupling (server heat reuse for office heating / domestic hot water)

Building Demo

Single Line Diagram

- Unit testing and partial system level testing performed at EDF Lab in Saclay
- Currently installing electrical infrastructure in the container and preparation of cooling solution for high power density rack



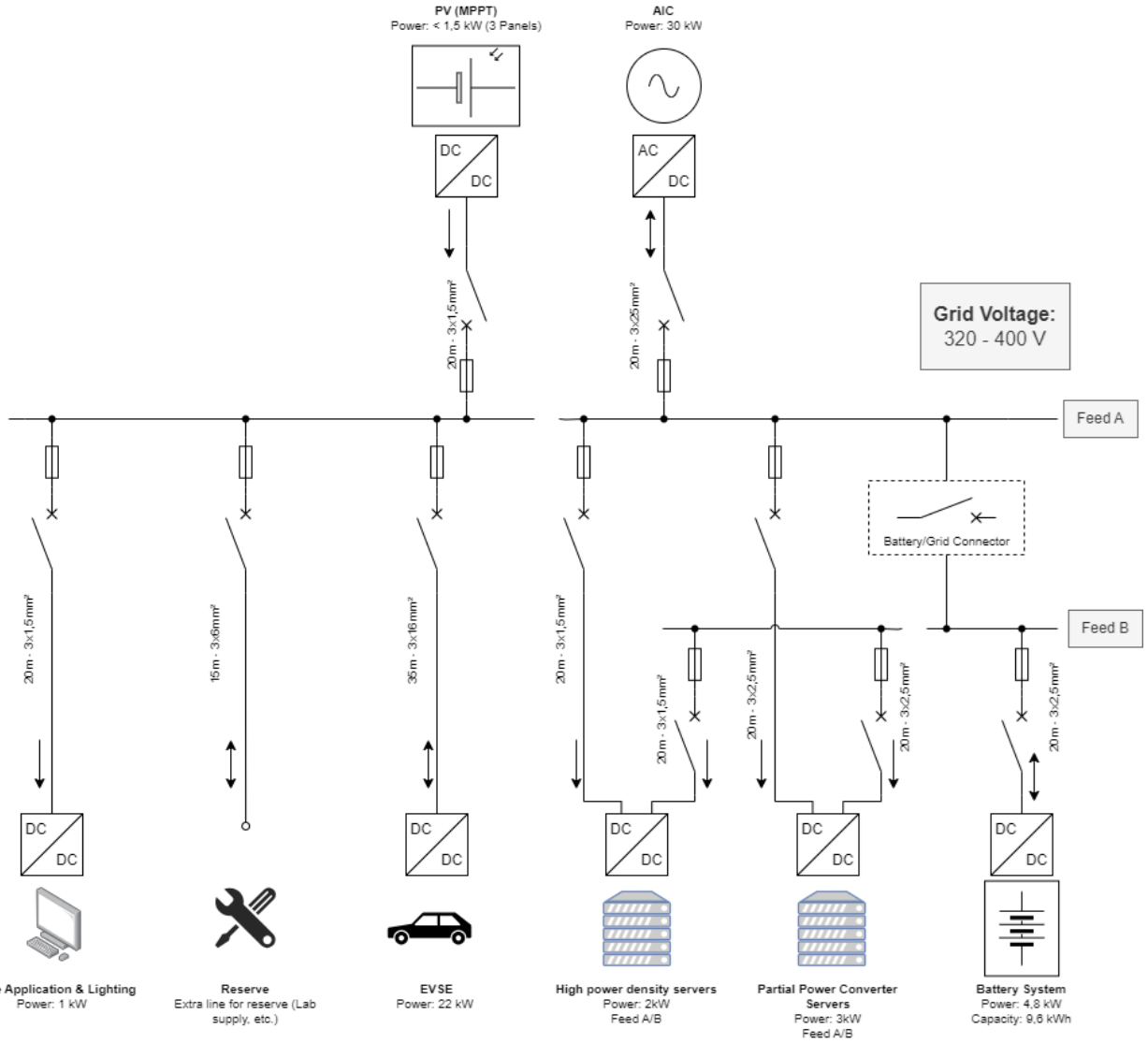

Industry Demo
Location & hosting





E.ON Energy Research Center | RWTH AACHEN UNIVERSITY

- **Location** : Two sites in Germany — EATON/RWTH Aachen (MVDC) + Phoenix Contact, Blomberg (LVDC)
- **Scope :**
  - EATON/RWTH: MVDC connection and protection systems
  - Phoenix Contact: LVDC industrial process grid — servo-drives and industrial machines as loads; DC-coupled PV and compact BESS for dynamic power management
  - Use cases targeted:
    - DC system resilience (peak power, droop stability),
    - DC protection system (arc prevention, short-circuit testing, insulation monitoring),
    - flexibility and scalability (reconfigurable grid for evolving industrial processes)

Industry Demo

Single Line Diagram

- **Commissioning by end of June**

1-2 kW

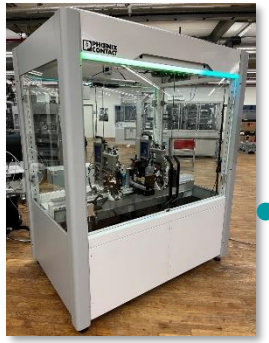

DC printing process

Milling machine



~20 kW

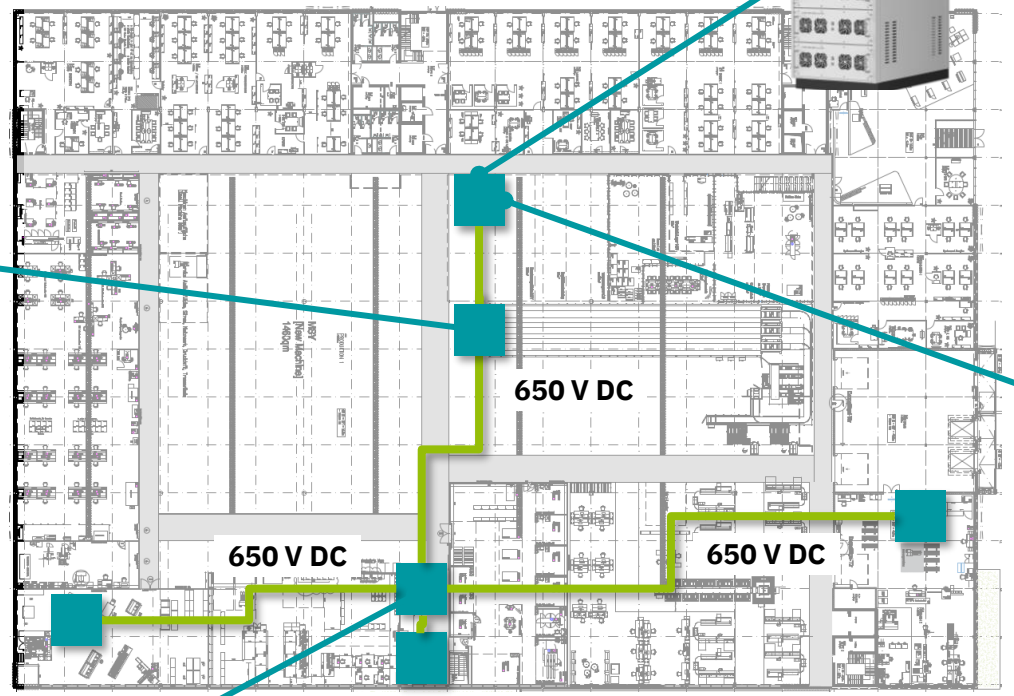

45 kWp

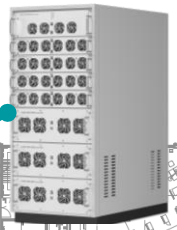

19“ BESS

DC-Feeder

Shop Floor Access from **Active Infeed Converter (AIC)** in the basement



~10 kW

DC-SGM molding machine

Clarification with OEM to connect to DC





DC-Robot

< 1 kW

2-5 kW



Rail-Cutter

Industry Demo Phoenix Contact

Single Line Diagram







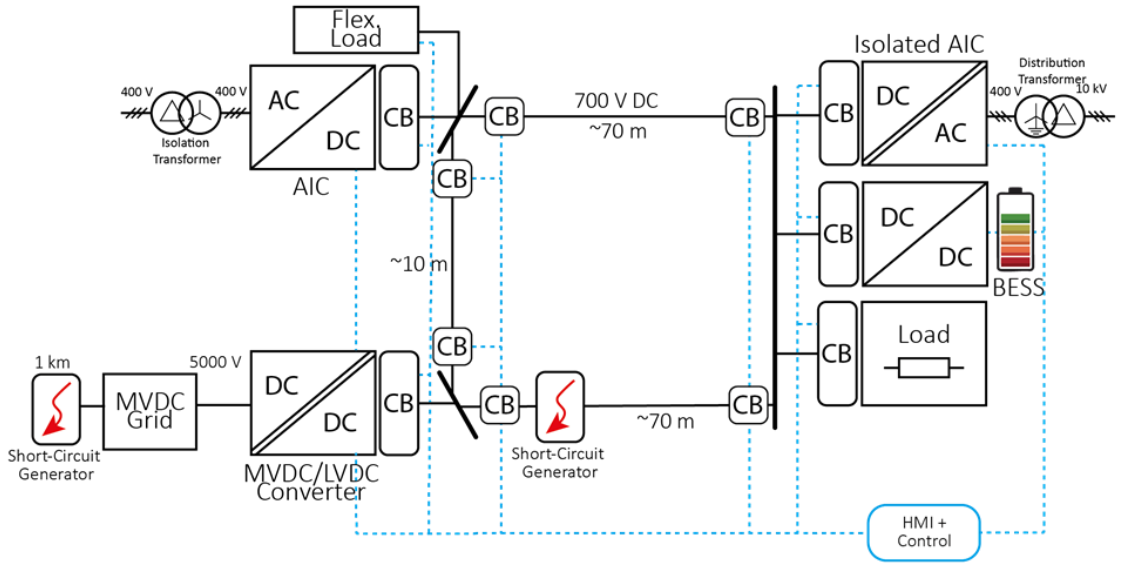

- **Currently in operation gathering results until Dec 2026**

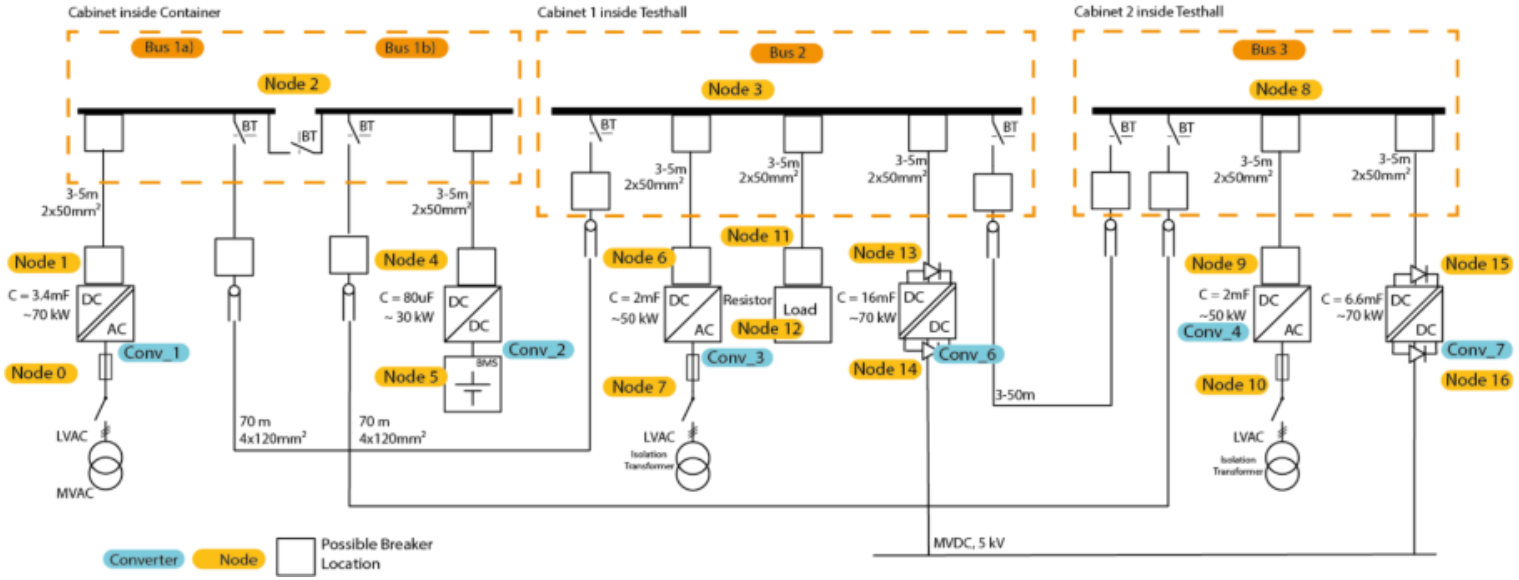

Port Demo
Location & hosting



PORTOS DA MADEIRA
Your Safe Port

- **Location** : Funchal Port, Madeira Island, Portugal
- **Scope :**
  - Virtual / digital twin demonstrator — no full physical DC grid deployment
  - Small-scale physical pilot: 10 kW PV, 10 kW / 10 kWh BESS, two DC charging stations, DC loads in terminal 1 (results extrapolated ×1000 to real port scale)
  - Monitoring system installed, collecting real vessel consumption profiles and energy price / weather data
  - Digital twin platform modelling the full port DC grid including ships and terminal operation
  - Use cases targeted:
    - DC port management (BESS-buffered ship connection)
    - Grid/port coordination (PV + storage providing frequency/voltage support and energy arbitrage to Madeira island grid),
    - port as energy with a DC infrastructure design and feasibility study for full port electrification aligned with IMO −40% carbon target by 2030

Port Demo

Single Line Diagram

- **Monitoring data since M12**
- **Physical demo commissioning planed for mid July**

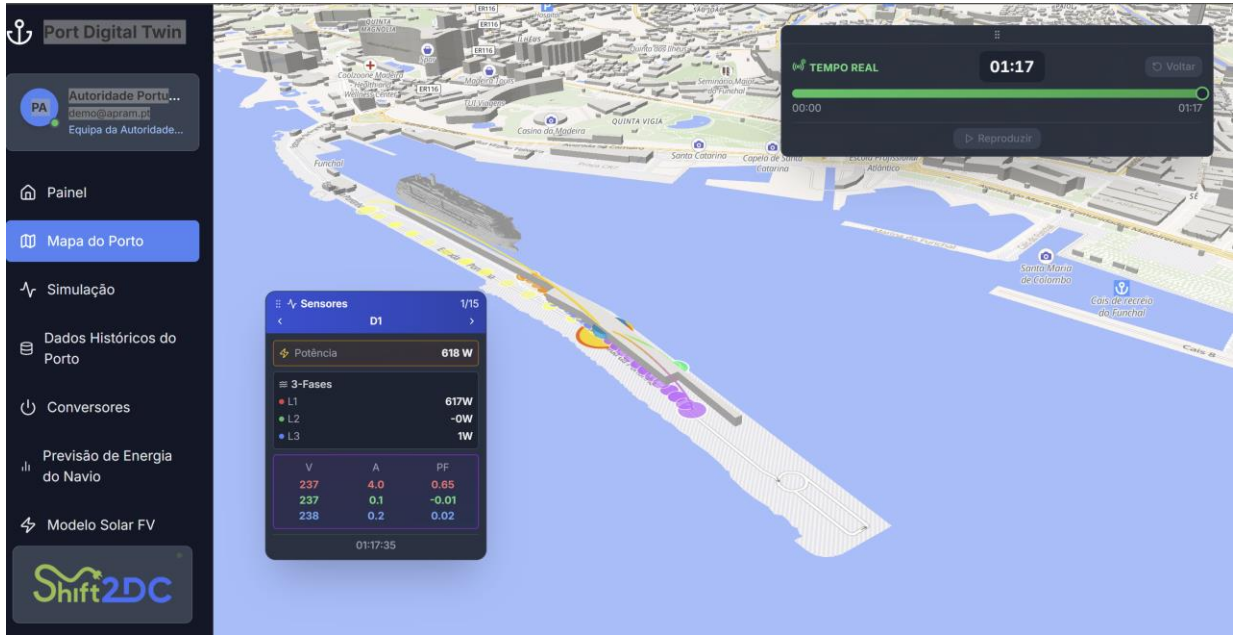

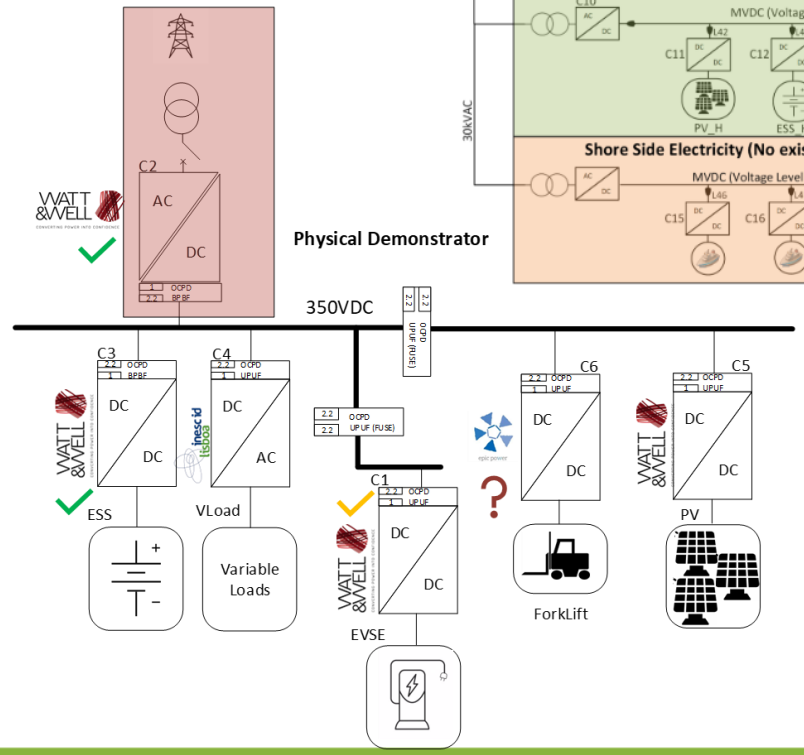

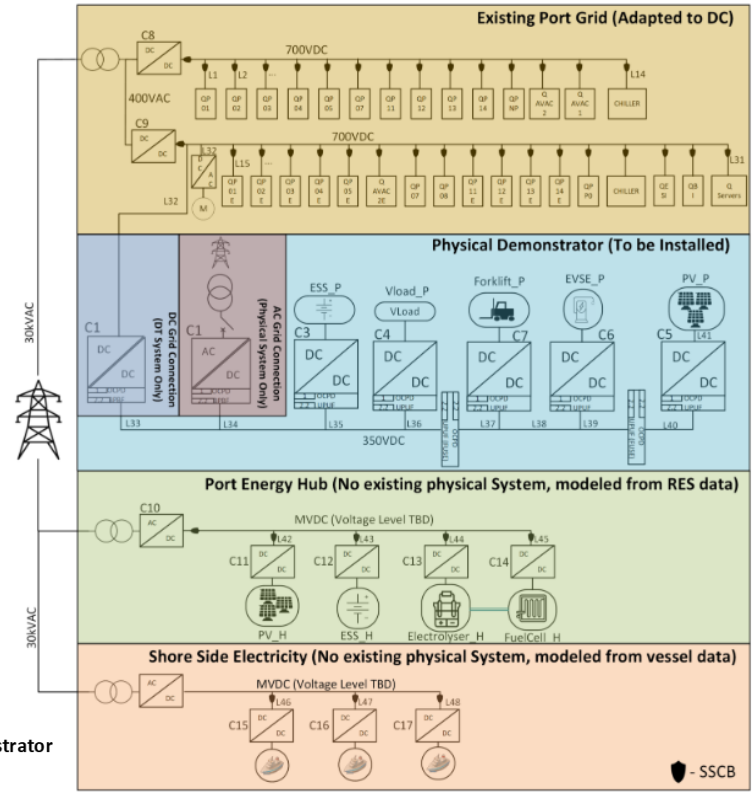

Why DC?

The Real Drivers

- **Everything is already DC inside.** PV panels, batteries, EVs, servers, laptops, LED lighting all use DC internally. Every AC/DC represents and additional conversion stage.
- **Renewables integration.** DC grids allow direct connection of PV and BESS without inverter stages.
- **Power electronics maturity.** Converters have reached cost/efficiency parity with transformers
- **Efficiency gains are real.** Simulations show 20%+ reduction in conversion losses in data centres. Buildings and industry show similar potential, even more with high penetration of EVSE
- **Controllability & flexibility.** Inherent local power flow control — especially valuable for grid services, EV charging and energy hubs.
- **Sustainability.** Less copper, less insulation material, fewer conversion stages → lower carbon footprint over the full lifecycle ??!! (to be assessed)

Bottom line: The technology is ready. The obstacles are not in the physics — they are in the ecosystem. ***Protections?!***

Four Domains

What We Expected vs. What We Found

Each application has a different bottleneck

🏢 **Data Centre** Driver: Efficiency, scalability, PUE | Bottleneck: Multi-vendor integration complexity; prototype costs distort CBA

🏠 **Building** Driver: DER self-consumption, EV charging | Bottleneck: Demo site lost (EDF commercial exit); DC heat pump unavailable on market

🏭 **Industry** Driver: Motor drives already DC; MVDC resilience | Bottleneck: High accuracy current measurement at 1000A extremely challenging

⚓ **Port** Driver: Energy hub potential, ship decarbonization | Bottleneck: Limited real vessel data; digital twin more complex than planned

But some are common:

- **Regulatory desert**
- **Protections**
- **Interoperability**

Bottleneck 1

The Regulatory Desert

DC does not exist in the law

- DC technologies are **largely absent from European and national grid policies.** Protection, earthing, metering, safety standards — none cover DC natively.
- Every installation requires **case-by-case negotiation** with network operators and safety authorities. This blocks market uptake even when the technology works.
- **Standardization gaps:** protection architectures, cabling specs, grounding systems, selectivity methods, product efficiency labelling — all missing for DC.
- Shift2DC is actively working inside **IEC and CENELEC** committees and is linked to CurrentOS Foundation and ODCA — but this cannot be solved by one project alone.

Lesson learnt: Regulatory readiness must be built in parallel with technology readiness — from day one.

Bottleneck 2

Protection Is Harder Than Expected

No natural zero-crossing: fault clearing in microseconds, not milliseconds

- In AC, faults produce a natural current zero every 10ms. In DC, **there is no zero crossing** — faults "must be" interrupted by active devices (SSCBs or HCBs) in microseconds.
- **Selectivity is the unsolved problem.** When multiple DC breakers are in series, both downstream SSCBs can trip simultaneously — confirmed in live lab testing at RWTH and INESC-ID.
- **Grounding and stray currents** in LVDC systems cause corrosion in metallic structures — a problem ignored in AC that becomes significant in DC.
- **Defining and sizing protections requires dedicated transient simulations:** Standard converter short-circuit behavior is not defined (fault-ride trough, UV or OC tripping times, hiccup, uncontrolled pass-through)

Lesson learnt: DC protection requires fundamentally new architectures — tested in multi-vendor, real-environment conditions, not only in simulation.

Bottleneck 3

Multi-Vendor Interoperability

Systems that work alone don't automatically work together

- The project involves **26+ technological solutions** from different manufacturers, each with its own control logic, communication protocol and timing assumptions.
- **EMS integration** (CIRCE gateway + Eaton EMS + W&W converters + Schneider) required significant rework to align droop-control parameters, communication interfaces and Docker containerisation.
- **Building demo:** Even defining shared droop curve parameters required dedicated bilateral technical meetings across partners.
- **Datacenter demo:** Solutions validated stand-alone in the lab may fail when exposed to full system interactions — explicitly flagged as a live risk.

Lesson learnt: Multi-vendor living labs (RWTH, TECNALIA) are not optional — they are the critical path. Set them up before the demonstrators, not in parallel.

Bottleneck 4

Real-World Site Complexity

The field always surprises you

- **Building demo lost its original site.** EDF's commercial partner exited the investment board. Full relocation to Cegelec Nord Tertiaire required 6+ months of renegotiation, contract work and partner onboarding.
- **DC heat pump not available on the market.** No commercially available DC heat pump could be procured. Workaround: Panasonic prototype unit or AC unit modification at EDF Lab Saclay.
- **Budget constraints** forced a smaller BESS in the building demo, limiting the ability to test certain use cases as originally planned.
- **Port demo:** Real vessel data was limited, making the digital twin model harder to calibrate against realistic port operating conditions.

Lesson learnt: Plan fallback sites, HIL replication facilities and flexible scope definition from the start — contractually.

Bottleneck 5

The Market Readiness Gap

Technology is ahead of the market

- **Prototype costs distort the CBA.** Prototypes always cost more than production units. Any CBA done today underestimates real-world DC economics and must be interpreted with care.
- **Commercial readiness is lagging TRL.** At M30: TRL 5.7 (target 6.6) but CRL only 4.0 (target 6.0) and BRL 3.5 (target 5.0). The market is not yet ready to pull.
- **Low awareness among end-users.** T1.6 confirmed that most companies, utilities and building managers have little knowledge of DC solutions. Adoption barriers are as much about perception as technical risk.

Lesson learnt: TRL alone is not enough. Market pull, trained installers, certified products and sector case studies must be built alongside R&D — not after.

What Is Working

Positive Lessons from Implementation

✅ Sizing and Portection Tools Work — and Are Being Used

- DC design tool (EDF), simulation tool, and protection methodology are actively used across all four demonstrators — not just academic outputs.

🤝 Multi-Vendor Collaboration Works

- 30+ partners from academia and industry (Schneider, Eaton, EDF, Nexans, Phoenix Contact) co-developed standards-ready methods despite competing interests.

📡 Open Source Strategy

- EMS tool, simulation library, use-case repository on GitHub — early sharing builds community and reduces replication costs for future DC projects in Europe.

🔬 Living Labs Proved Critical

- RWTH, Tecnalia, INESC-ID and EDF living labs intercepted integration problems before demonstrator commissioning, saving time and cost.

📜 Standardisation Momentum Growing

- Project actively feeding IEC, CENELEC, and ENTSO-E. D1.2 findings already influencing draft DC grid code discussions in two member states.

Summary

✓ What Works

- Physics & converters perform as designed
- SSCBs interrupt faults in microseconds
- Droop control stabilises voltage without permanent communication
- Tools built and open-sourced at shift2dc.eu
- All 4 application domains confirmed technically feasible

⚠ The Real Bottleneck

- No harmonised regulatory framework
- Commercial products lag prototypes
- Too few engineers trained in DC protection design
- Economic proof at scale still absent

→ If You Deploy Now

- Use the open-source tools (shift2dc.eu)
- Design HCB/SSCB protection hierarchies from day one
- Do not reuse AC protection logic or AC simulation tools
- Engage your national standards body now — the normative framework is still being written

> *"The transition to DC is not a question of whether. The evidence from data centres, industry, buildings, and ports all points in the same direction. The question is how quickly the standardisation, the supply chain, and the design ecosystem can catch up with what the technology can already do.*

SHIFT2DC Introduction

Consortium



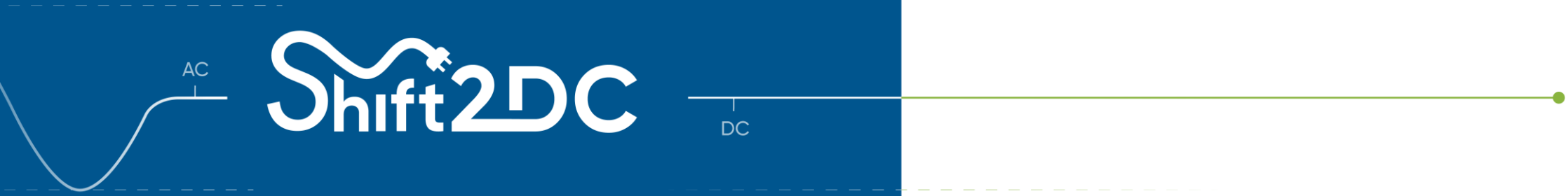

Funded by
the European Union

Funded by European Union´s Horizon Europe Research and innovation programme under grant agreement no. 101136131.
Views and opinions expressed in this document are however those of the authors only and do not necessarily reflect those of the European Union or the European Climate, Infrastructure and Environment Executive Agency (CINEA). Neither the European Union nor the granting authority can be held responsible for them.

shift2dc.eu

/Shift2DC_2023

/company/shift2dc