UNIVERSITAT POLITÈCNICA DE CATALUNYA
BARCELONATECH

Institute of ENERGY TECHNOLOGY

Intelligent Microgrid Project Research in Spain & Denmark

Intelligent Microgrid Project Research in Spain and Denmark

by

Prof. Josep Guerrero

Aalborg University
Institute of Energy Technology
joz@et.aau.dk
http://www.iet.aau.dk

Outline

1. **Aalborg University Research**
2. Microgrid control research
3. Microgrid site in Spain

Aalborg University Microgrid Research

UNIVERSITAT POLITÈCNICA DE CATALUNYA BARCELONATECH

Institute of ENERGY TECHNOLOGY

Intelligent Microgrid Project Research in Spain & Denmark

PV Systems - Main facilities

- **Grid Converters** – up to 5A/400V, single-phase or three-phase with flexible digital control: dSpace DS1103 or TMS320F2812 and F28335 eZdsp Development board
- **PV inverter test setup** (includes 32kW Dynamic PV simulator, 4.5-kW Dynamic Grid Simulator, 3-kW Electronic AC Load, Anti-islanding Test Setup)
- **Residential Micro-Grid setup** (includes 1.9-kW Polycrystalline silicone solar panel array, 1.5-kW Danfoss Solar inverter and 1.7-kW SMA Sunny Boy PV inverters, SMA Sunny island inverter, VRB-ESS 5-kW – 4h Flow battery, as well as California Instruments 3kW programmable AC load)
- **PV-E PVPM 1000C - 1000V/20A photovoltaic I-V curve tracer** – for panel/string characterisation
- **Flashing Solar Simulator Mencke & Tegtmeyer - 240V/16A** – for indoor characterisation of PV panels
- **California Instruments Grid Simulator** – for fault simulations
- **High bandwidth Regatron PV Simulator** (includes TopCon Quadro Power Supply Module, TC.LIN Linear Post-Processing Unit, and SASControl PC Software). Output ratings: 32 kW, 1000VDC, 40A

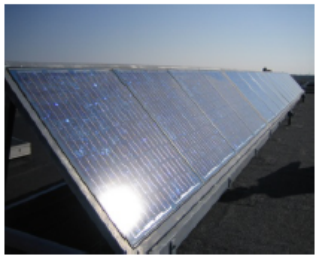

Aalborg University Microgrid Research

Parallel DC/AC conveter systems

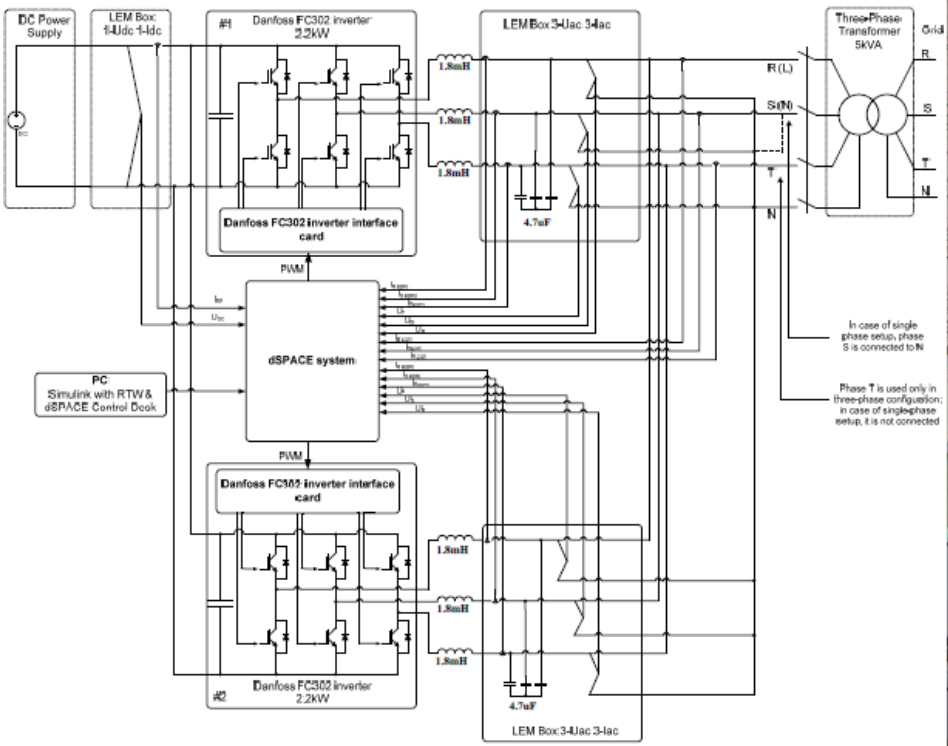

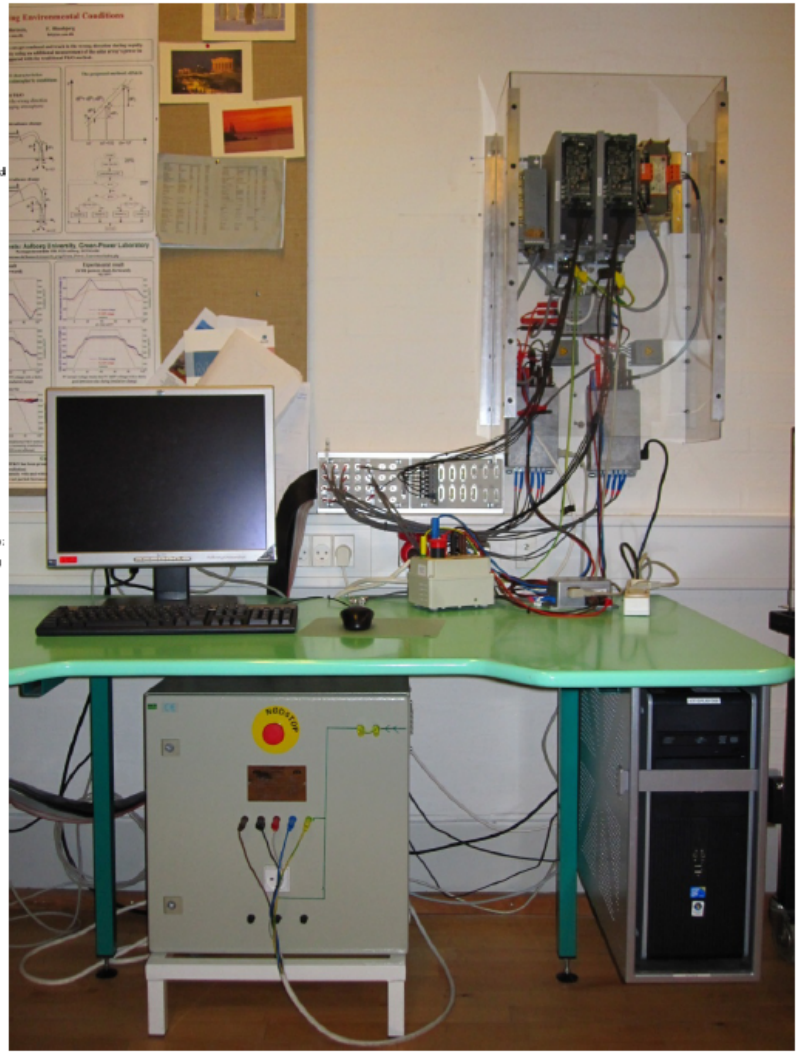

AC/DC/Hybrid Microgrid systems

PV Systems - Main activities

Advanced Control for Grid Converters

- **Control structures** – development of the control structures in different reference frames such as natural abc, stationary αβ or synchronously rotating dq for better matching the application.
- **Current controllers** – different linear (PI, resonant) and nonlinear (hysteretic, predictive) controllers
- **Grid synchronization** – phase-locked loop (PLL) based strategies
- **Grid monitoring** – accurate detection of grid voltage magnitude, frequency and phase angle for fast grid fault detection. On-line grid impedance estimation.
- **Ancillary services** – voltage support, frequency control, reactive power compensation, UPS, active filtering, etc. can be implemented in software.
- **Control under grid fault** – symmetrical currents can be injected during unsymmetrical grid faults.

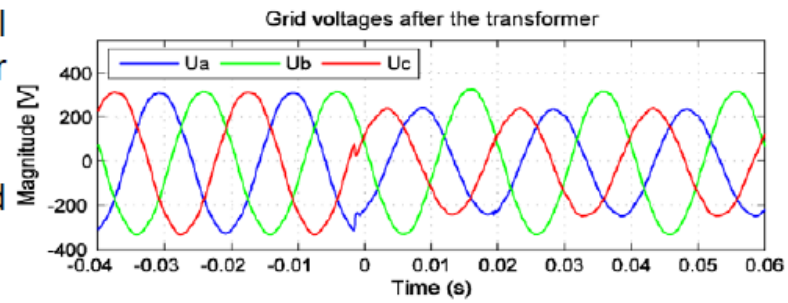

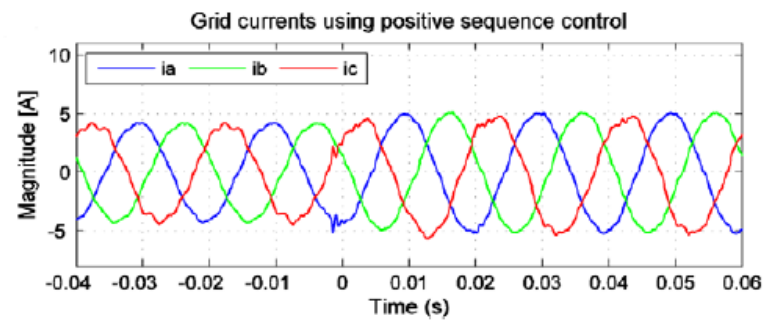

PV Systems - Main activities

Software Anti-Islanding of PV Inverters

- **Advanced grid voltage and frequency monitoring** for passive anti-islanding detection
- **Active anti-islanding methods** based on:
  - Harmonic injection
  - P,Q variations
  - Phase modulation

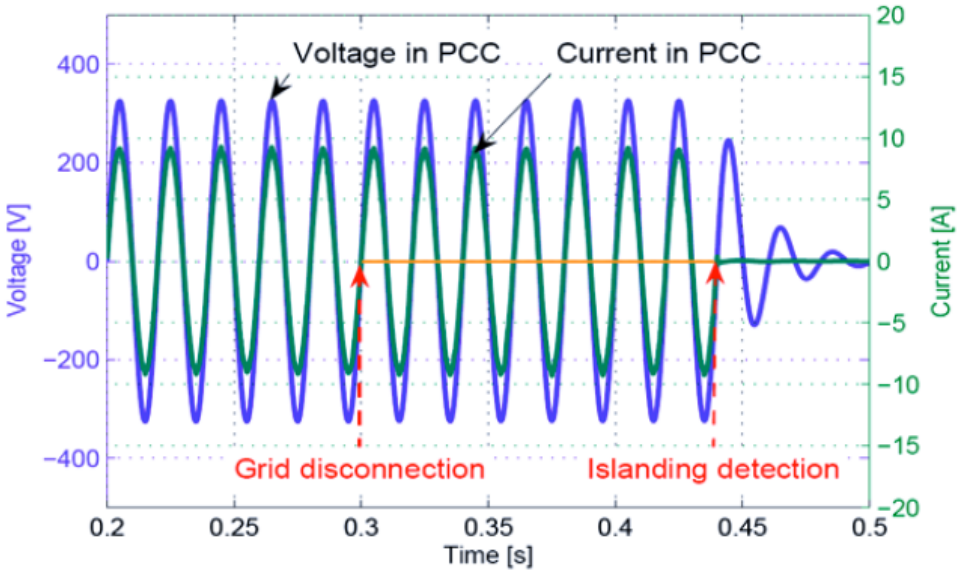

Integrated multi-function DC/DC converter for PV generation and energy storage for micro grids

- **Hardware design** of:
  - interleaved DC/DC converter topology for battery management
  - DC/DC converter for photovoltaic array
  - Integrated into a single 3-phase bridge

Energy management for DC coupled micro grids

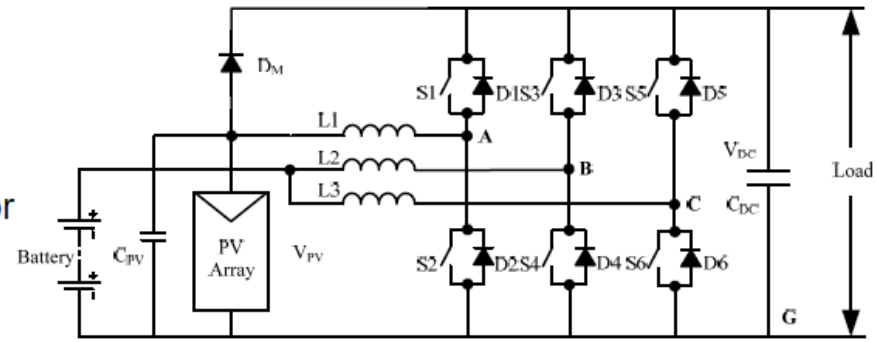

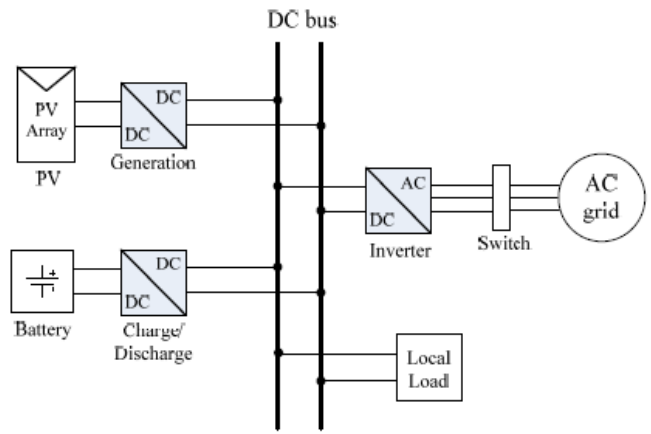

Aalborg University Microgrid Research

UNIVERSITAT POLITÈCNICA DE CATALUNYA BARCELONATECH

Institute of ENERGY TECHNOLOGY

Intelligent Microgrid Project Research in Spain & Denmark

PV Systems - Main activities

Control of Grid Interactive PV Inverters

- **Development of new functions** for grid-connected PV inverters to increase their penetration level
- **Improve LV network power quality** by PV inverters (harmonics, fluctuations, unbalance)
- Contribution to new **LV grid standards** regarding PV integration

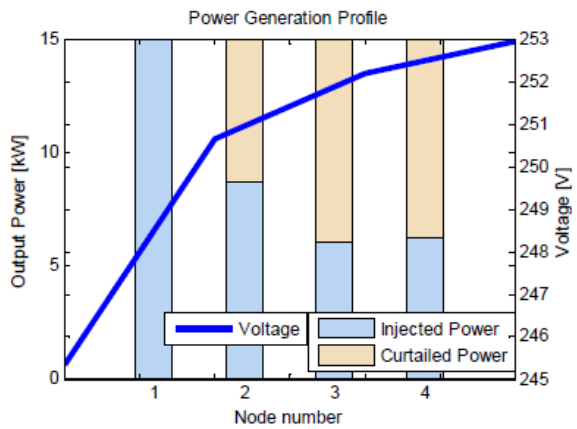

Power curtailment

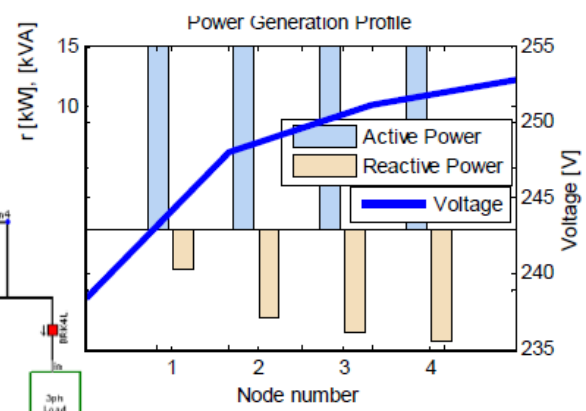

Reactive power support

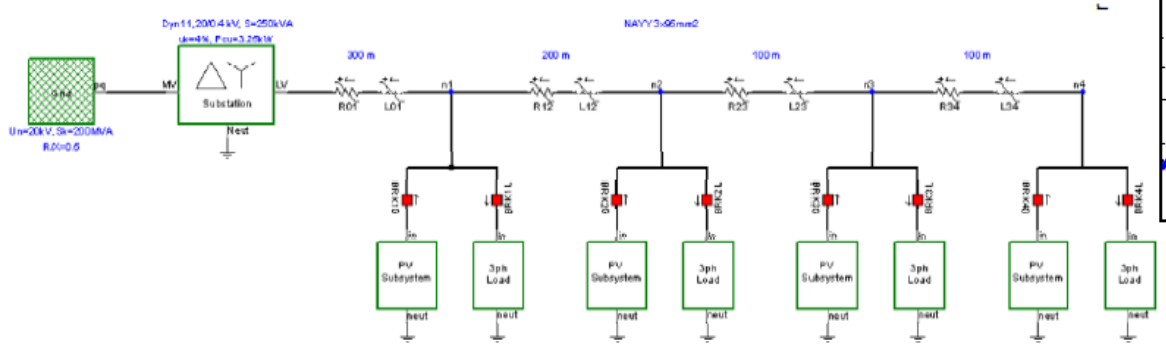

PV Systems - Main activities

Advanced MPPT and Diagnostics

- **Improved MPPT** optimized for faster tracking and higher tracking efficiency in cloudy, rapidly changing conditions, typical to northern Europe
- **Intelligent MPPT** with detection of slow partial shading caused by fixed obstacles
- **On-line characterization** and performance monitoring of PV panels by series and shunt resistance estimation, detection of partial shadows caused by dirt or reduction of the transparency of the covering layers as well as rated power estimation
- **Model parameter extraction** (Rs, Rp, diode quality factor) from data-sheet
- **Cell/connection failures detection**

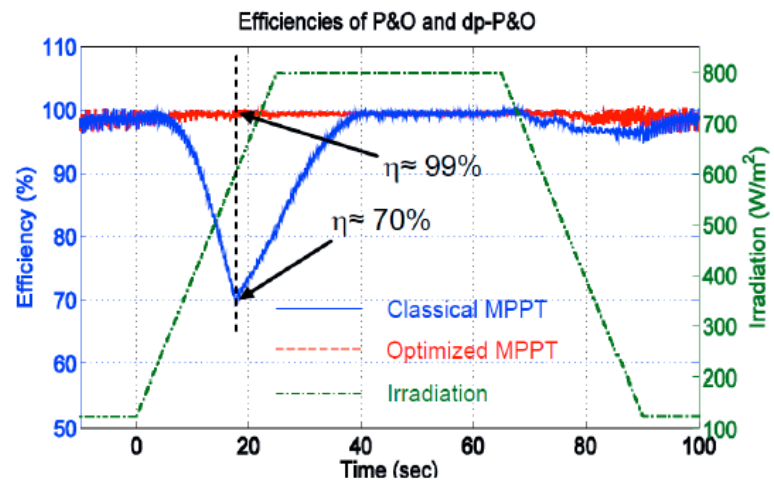

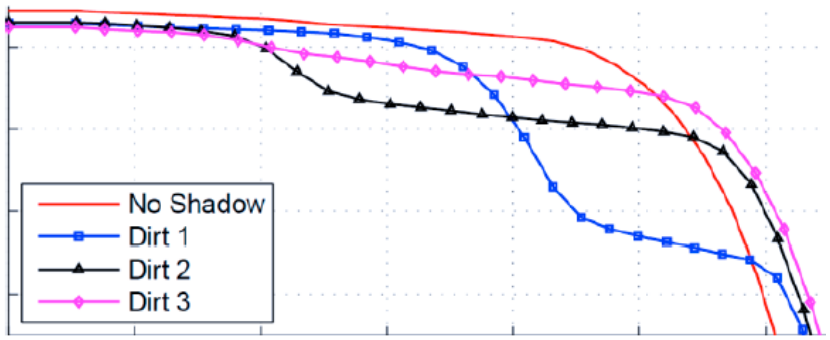

Aalborg University Microgrid Research

UNIVERSITAT POLITÈCNICA DE CATALUNYA BARCELONATECH

Institute of ENERGY TECHNOLOGY

Intelligent Microgrid Project Research in Spain & Denmark

Department of ENERGY TECHNOLOGY

Green Residential Micro Grid – Main Components

5kW – 4h, 28V **Flow-Battery**
+Island-Grid Inverter
Can switch to the grid for selling electric energy, or buying if there is not enough generation

1.9 kWp **Solar Array**
+ PV **Inverter**

1.5 kW **Wind Turbine**
+ WindyBoy **Inverter**

House
3kW **Electronic AC load**

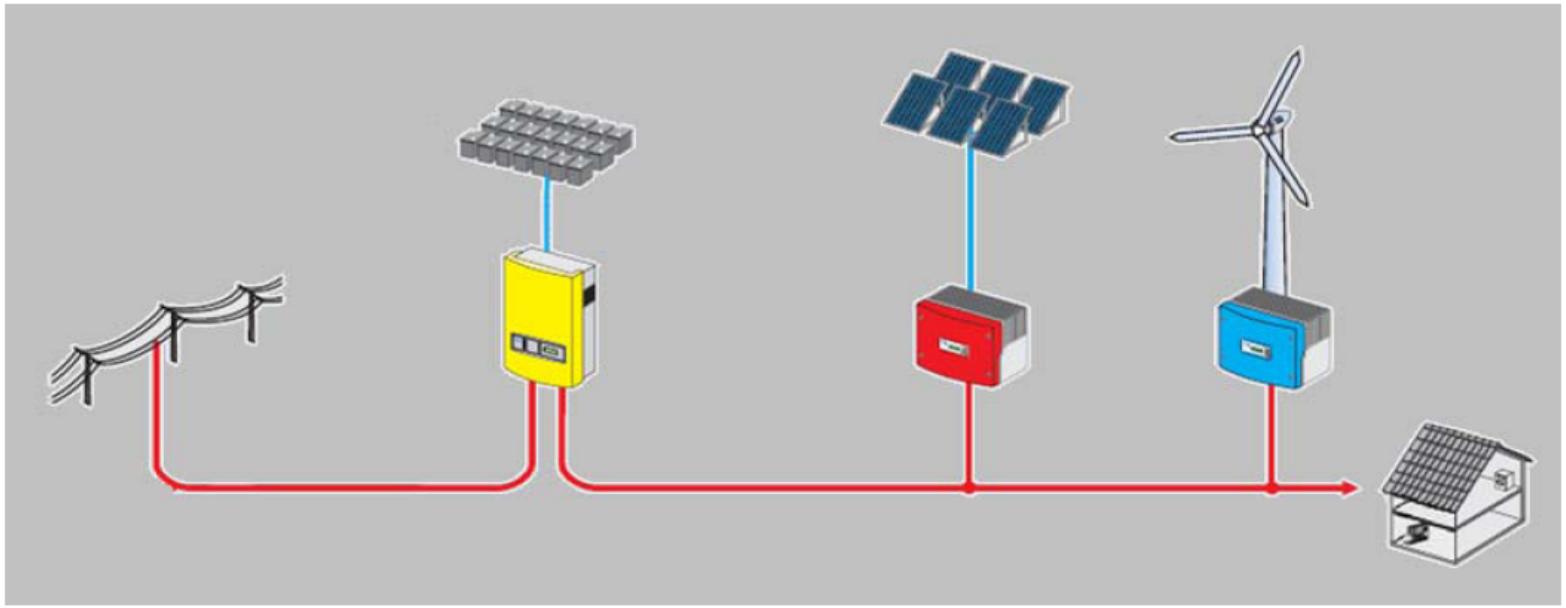

Aalborg University Microgrid Research

UNIVERSITAT POLITÈCNICA DE CATALUNYA BARCELONATECH

Institute of ENERGY TECHNOLOGY

Intelligent Microgrid Project Research in Spain & Denmark

Green Residential Micro Grid – Flow battery

Flow Battery 5kW-4h
- no maintenance
- 10,000+ deep cycles
- high efficiency
- full response over temp
- nominal charging current
- x2 overloading
- ca. 300 USD/kWh

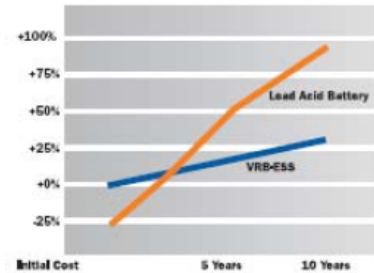

	VRB-ESS	Lead Acid
Current Output	5kW (112A) x 4 hours	112A x 4 hours
Output Voltage Range (VDC)	42-56	42-60
Approx. Dimensions (W x D x H, in.)	34 x 86 x 80	32 x 30 x 90
Approx. Weight (Full, lbs.)	7,000	2600
Thermal (Stg/Opg, °F)	32-100/32-100	32-100/32-100
Approx. DC-DC Efficiency, round trip	75%	45%*
Performance vs. Temp.	Flat response over temp. range	IEEE/ANSI and manufacturers derating
Containment	Double containment of electrolyte storage	Cabinet drip tray
Lifetime (discharge cycles)	10,000+	1500
Depth of Discharge	From full to 20% state of charge	From full to 80% state of charge**
Recharge Time	4 hours (optional 1:1 charge/discharge ratio)	20 hours (5:1 charge/discharge ratio)
Speed of response	1 ms	1 ms
Overload capability	2x nominal rating	1.25x nominal rating
Maintenance	Annual inspection if desired	At least 4 times per year

* "A Study of Lead-Acid Battery Efficiency Near Top-of-Charge and the Impact on PV System Design" John W. Stevens and Garth P. Corey, Sandia National Laboratories, 1996 IEEE Photovoltaic Specialists Conference

** deeper discharges reduce life exponentially

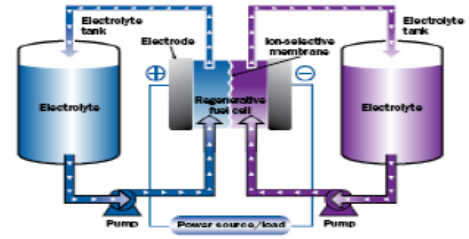

Patented vanadium-based redox regenerative fuel cell converts chemical energy into electrical energy.

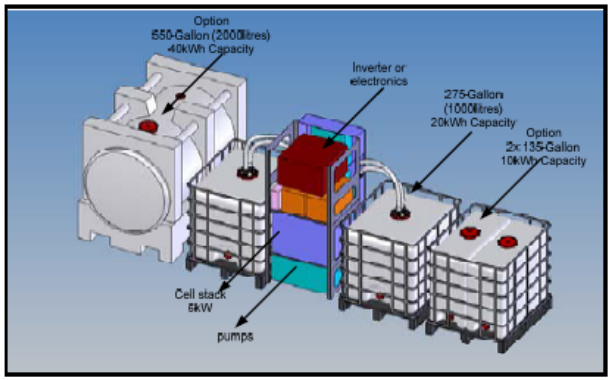

Department of ENERGY TECHNOLOGY E.T.

Aalborg University Microgrid Research

Green Residential Micro Grid – System Configuration

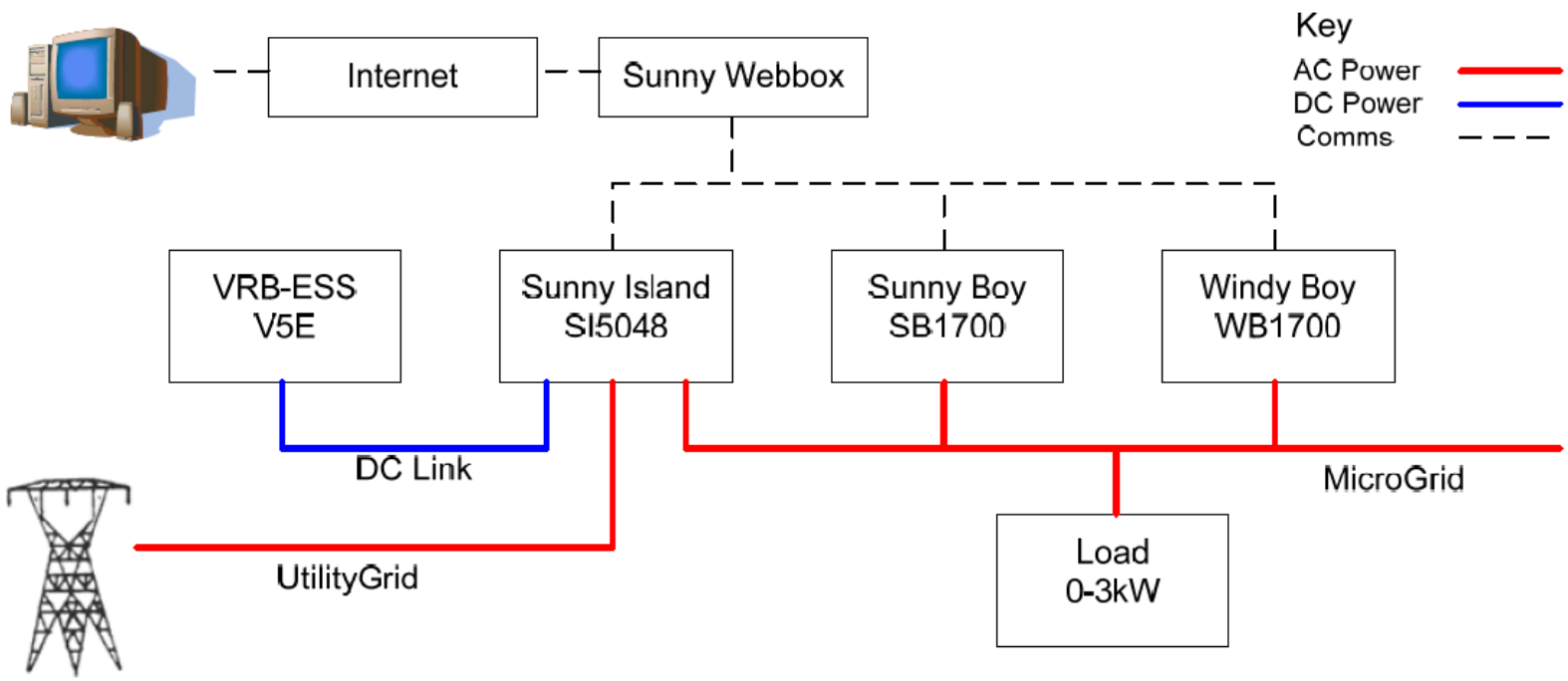

Aalborg University Microgrid Research

Green Residential Micro Grid – Laboratory view

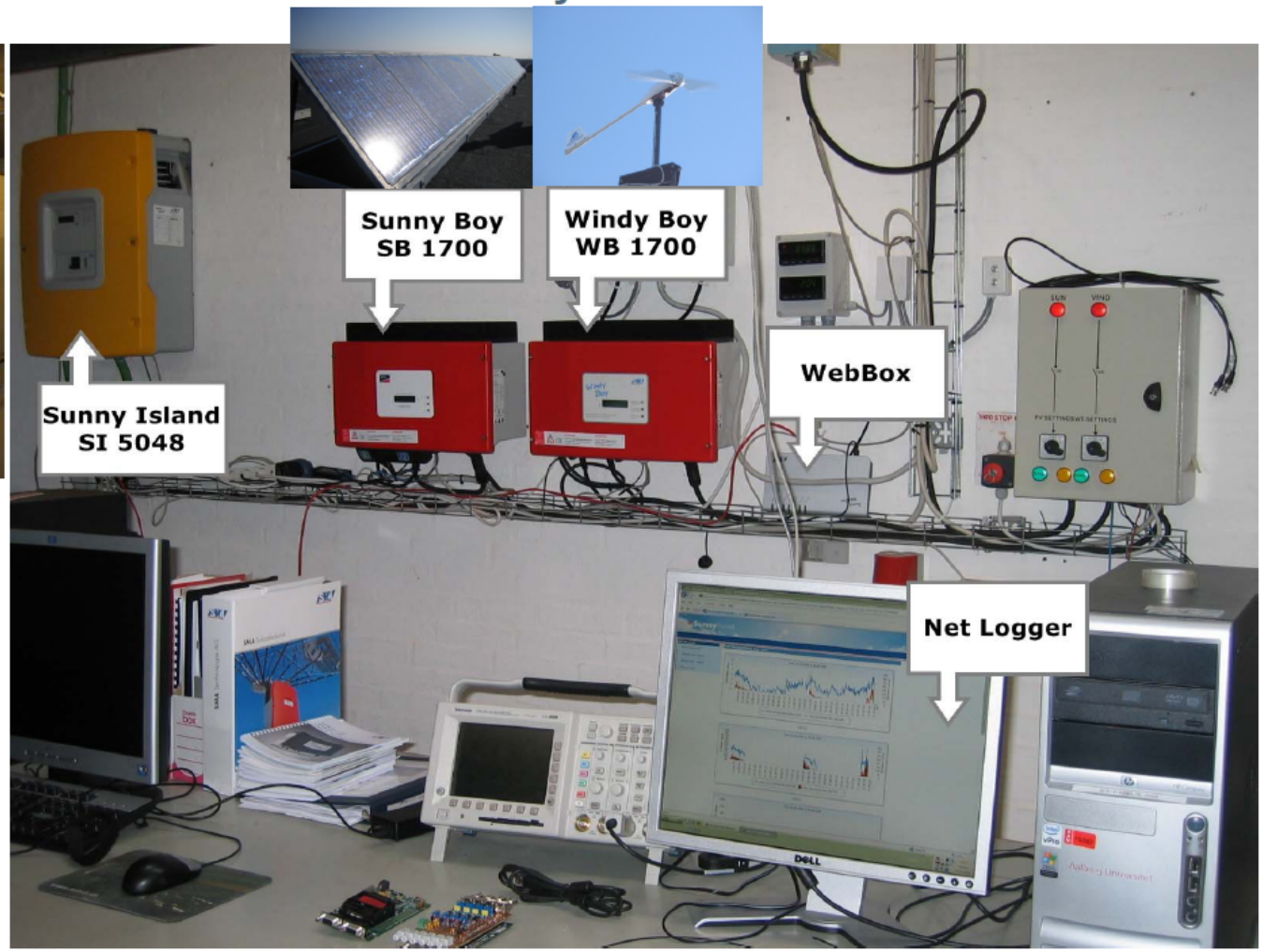

Aalborg University Microgrid Research

Green Residential Micro Grid – On-line monitoring

Monitoring of:

- generated wind power
- generated solar (PV) power
- total power fed into utility network

- wind speed
- ambient and PV cell temperature
- solar irradiation

- sampling up to 1Hz

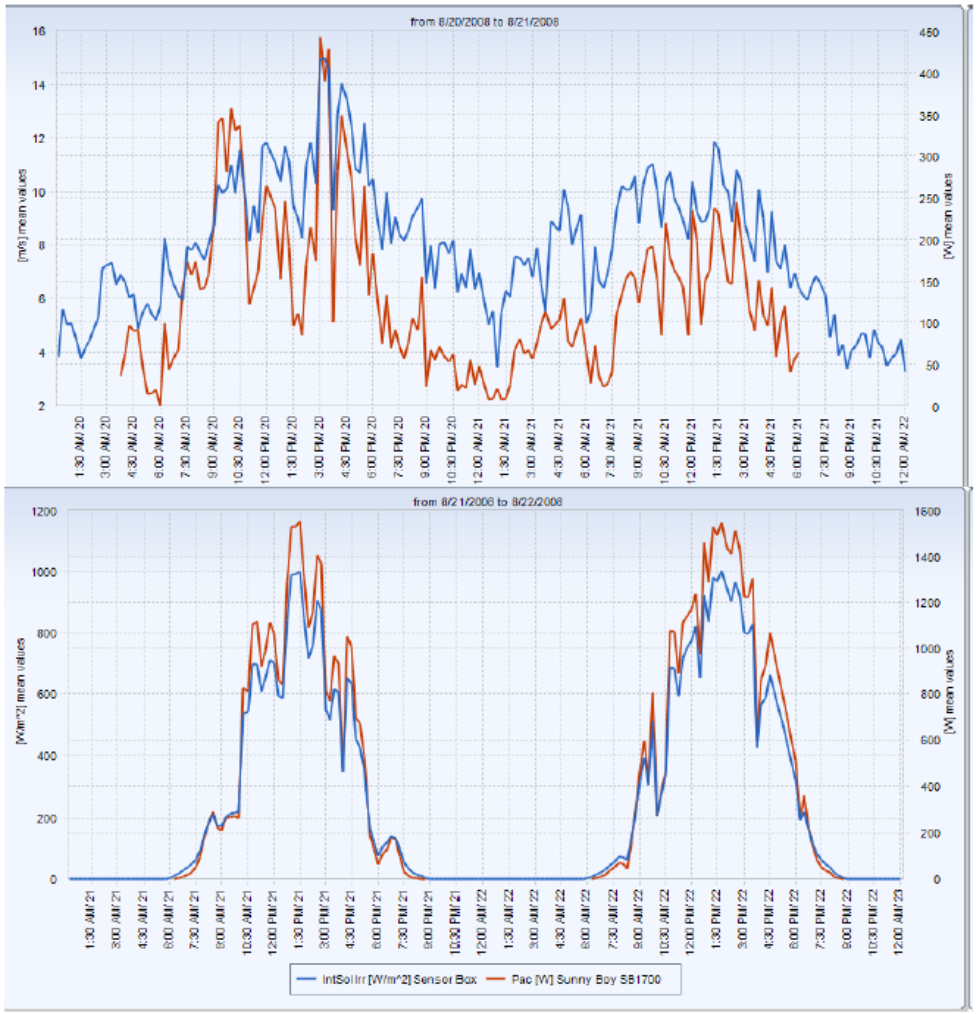

Institute of ENERGY TECHNOLOGY

Intelligent Microgrid Project Research in Spain & Denmark

Department of ENERGY TECHNOLOGY

Outline

1. Aalborg University Research
2. **Microgrid control research**
3. Microgrid site in Spain

Microgrid Control Research

Hierarchical Control

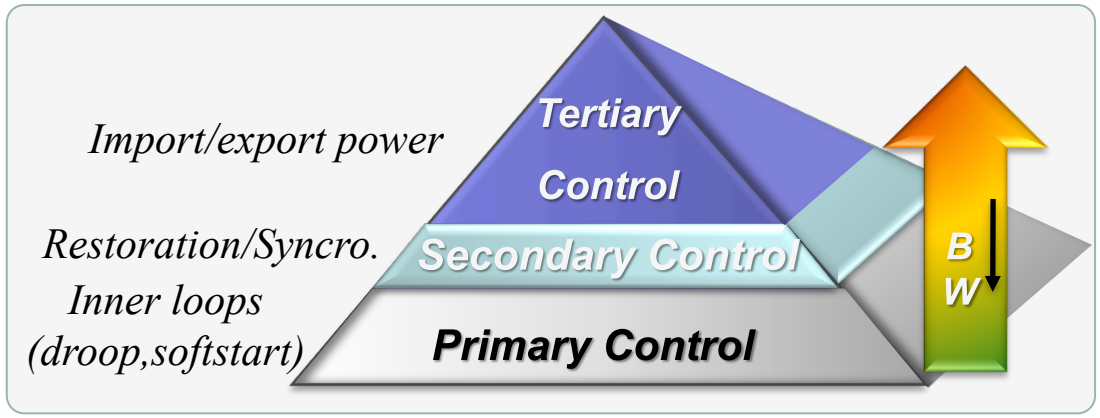

- *Primary controls* the droop control used to share load between converters.
- *Secondary control* is responsible for removing any steady-state error introduced by the droop control.
- *Tertiary control* concerning more global responsibilities decides the import or export of energy for the microgrid.

Microgrid Control Research

Hierarchical Control

- *Droop control of AC systems*

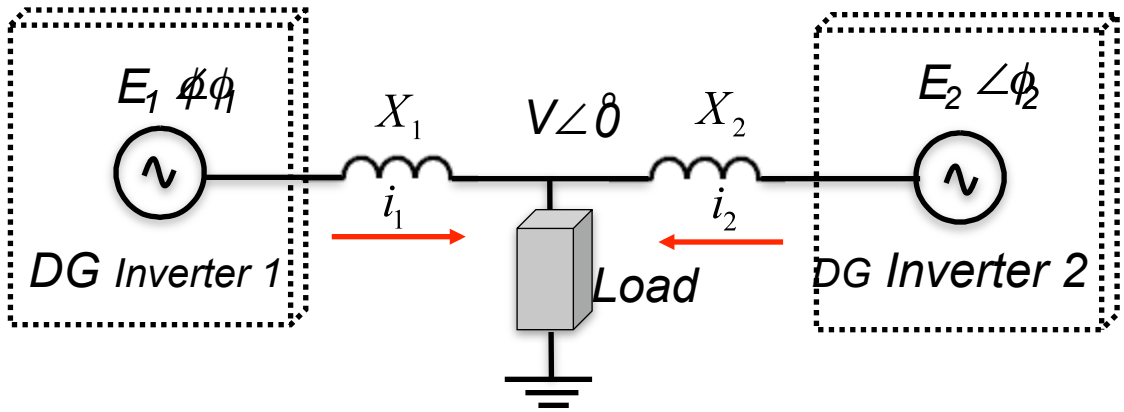

Active power $P = \frac{VE}{X}\sin\phi$ **Reactive power** $Q = \frac{EV\cos\varphi - V^2}{X}$

Frequenc droop

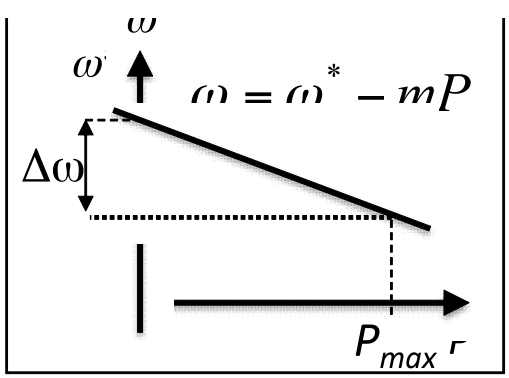

Amplitud droop

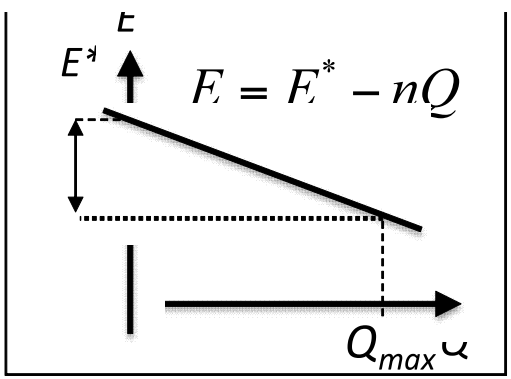

Microgrid Control Research

Hierarchical Control

Islanded operation

- Voltage and frequency management

The system acts like a voltage source, controlling power flow through voltage and frequency control loops adjusted and regulated as reference within acceptable limits.

- Supply and demand balancing

In grid-connected mode, the frequency of the DG units is fixed by the grid. Changing the setting frequency, new active power set points that will change the power angle between the main grid and the microgrid can be obtained.

- Power quality

The power quality can be established in two levels:

1)Q compensation and harmonic current sharing inside the microgrid

2)Q and harmonic compensation at the PCC -> MG can support the power quality of the main grid.

Microgrid Control Research

Hierarchical Control

Droop control

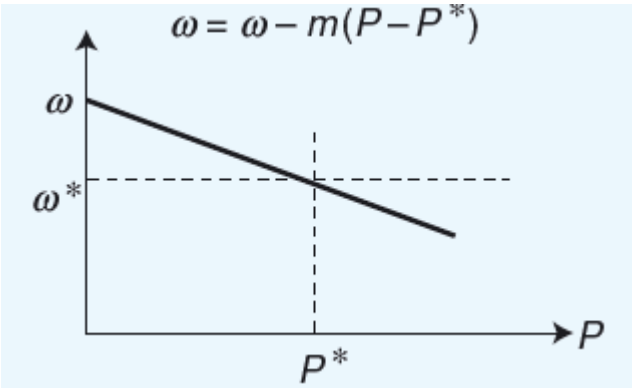

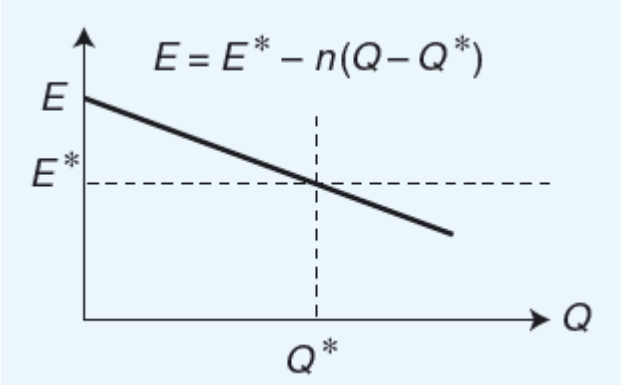

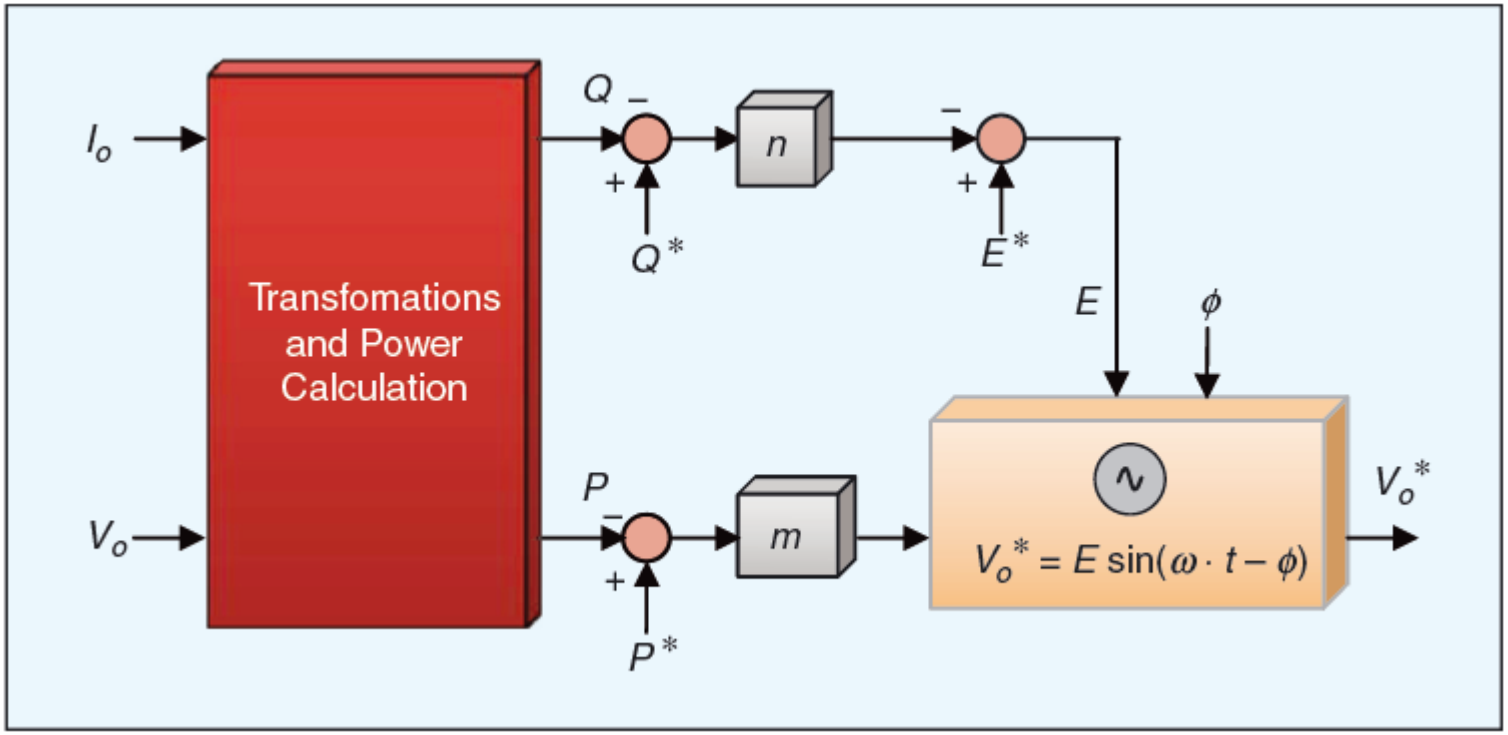

Microgrid Control Research

Hierarchical Control

Virtual Impedance

- Multiloop control droop strategy with the virtual output impedance

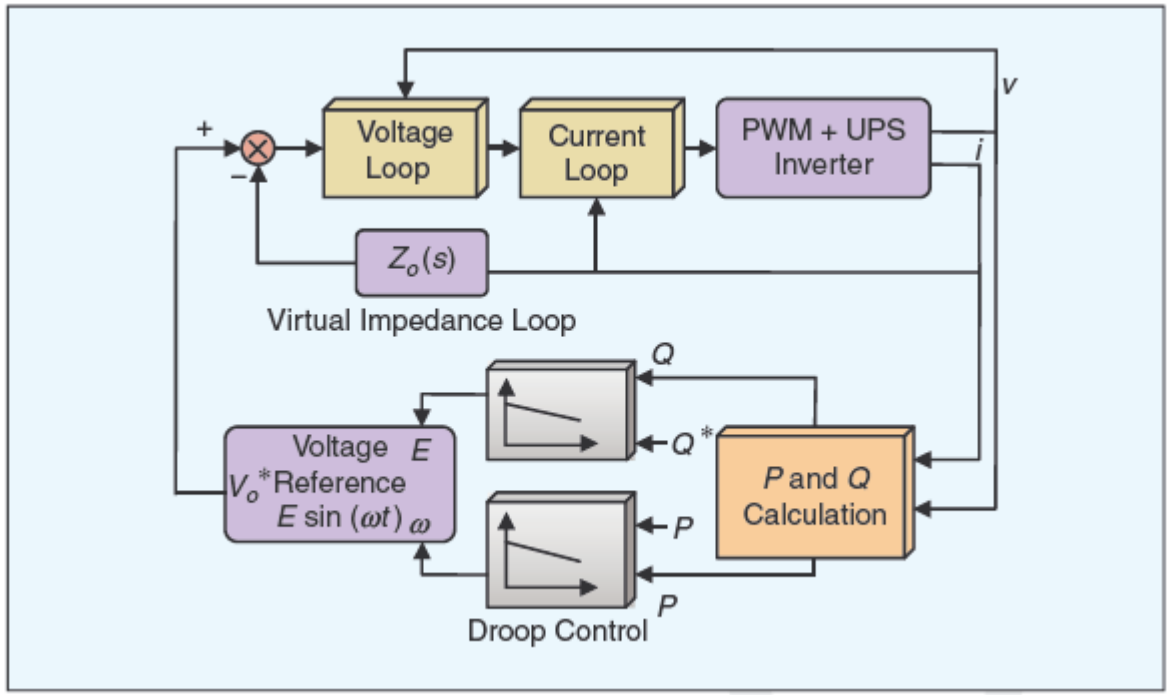

Microgrid Control Research

Hierarchical Control

- Virtual output impedance loop

$$v_o^* = v_{ref} - Z_D(s) \cdot i_o$$

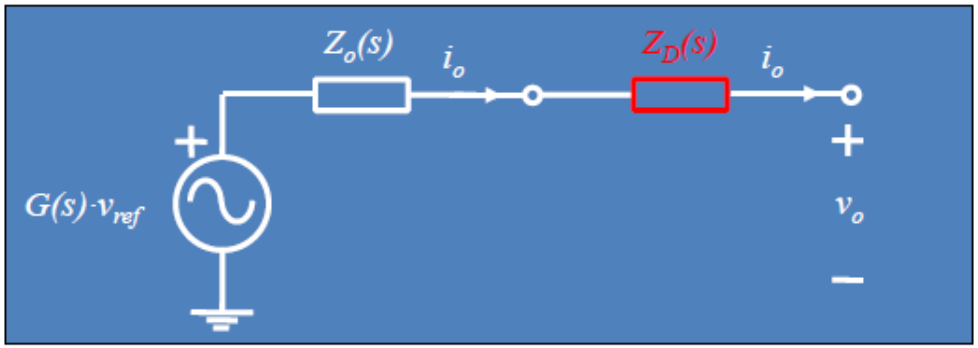

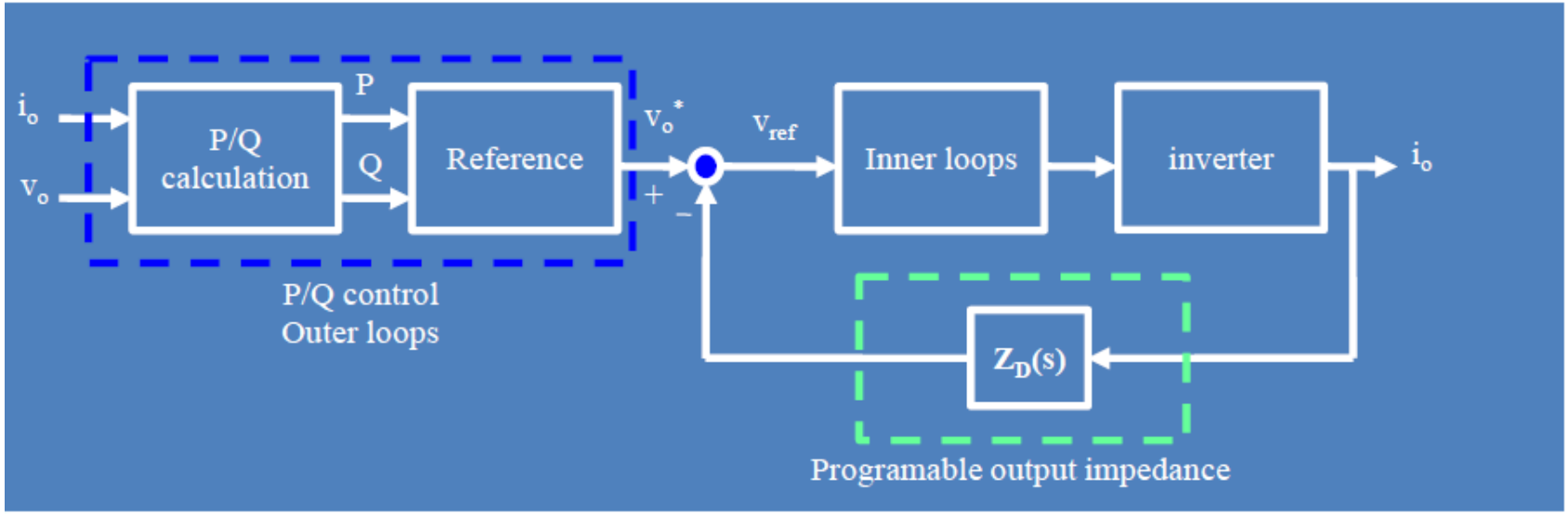

- Objective: fix the output impedance

Microgrid Control Research

Hierarchical Control

Virtual Impedance

Soft-start operation of the inverter

$$I_p \approx \frac{E}{\omega L_D} \cdot \Delta\phi$$

Initial PLL error

Output impedance

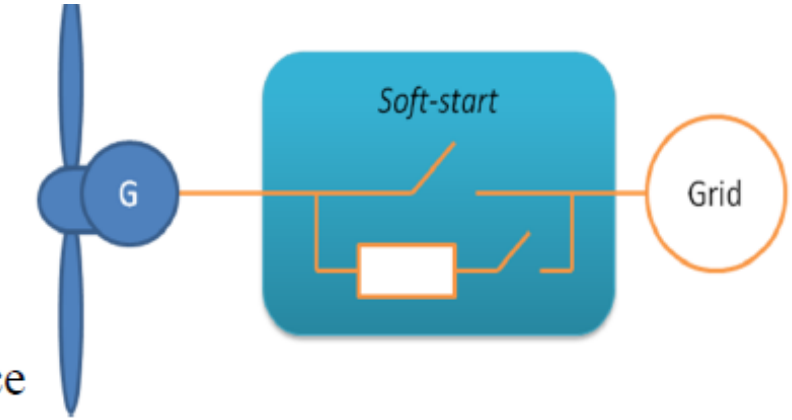

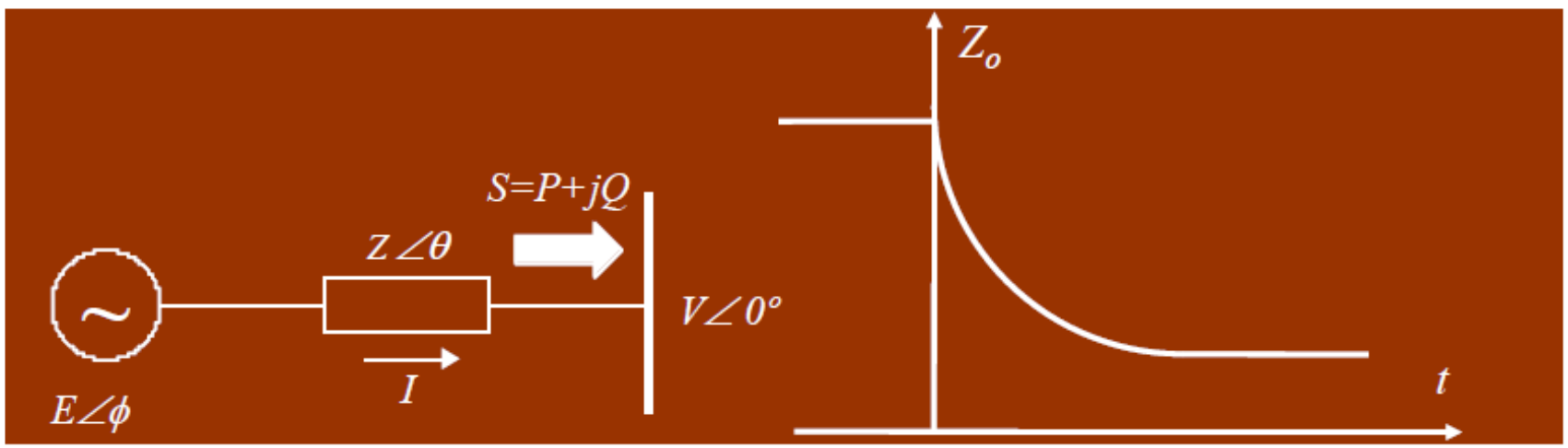

$$L_D^* = L_{Df}^* + (L_{Do}^* - L_{Df}^*) \cdot e^{-t/T_{ST}}$$

Microgrid Control Research

Hierarchical Control

- Virtual output impedance loop

Harmonic current sharing

$$H_i(s) = \frac{2k_i s}{s^2 + 2k_i s + \omega_i^2}$$

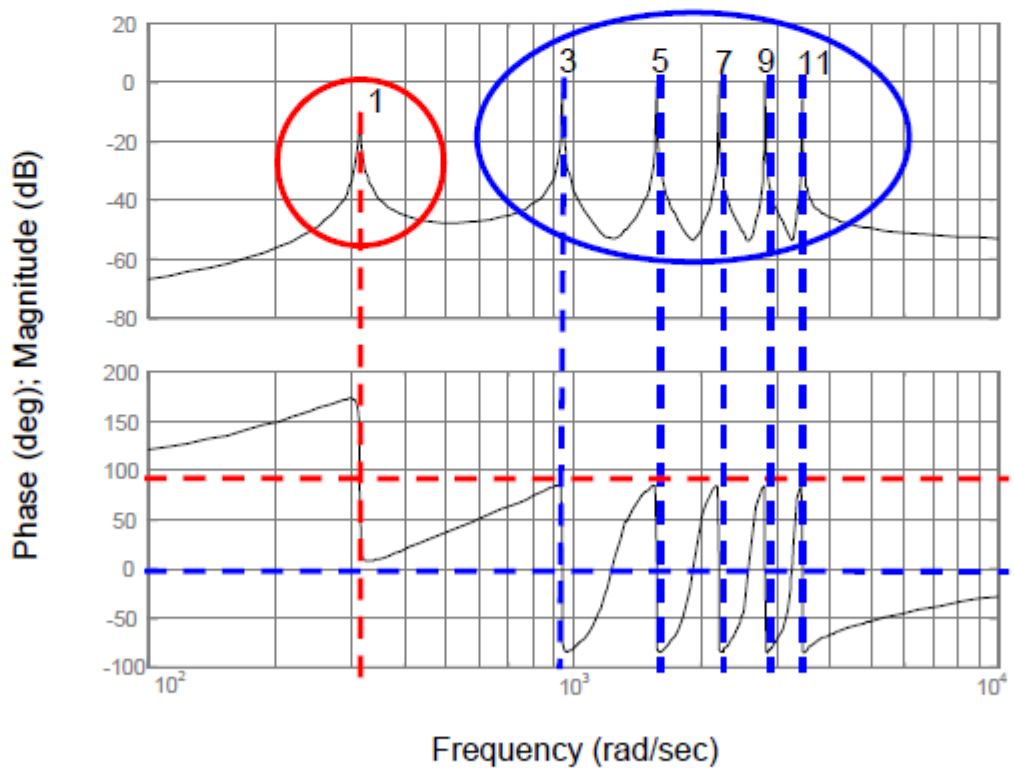

Microgrid Control Research

Hierarchical Control

- Reactive power control of the microgrid. Low voltage ride-through.

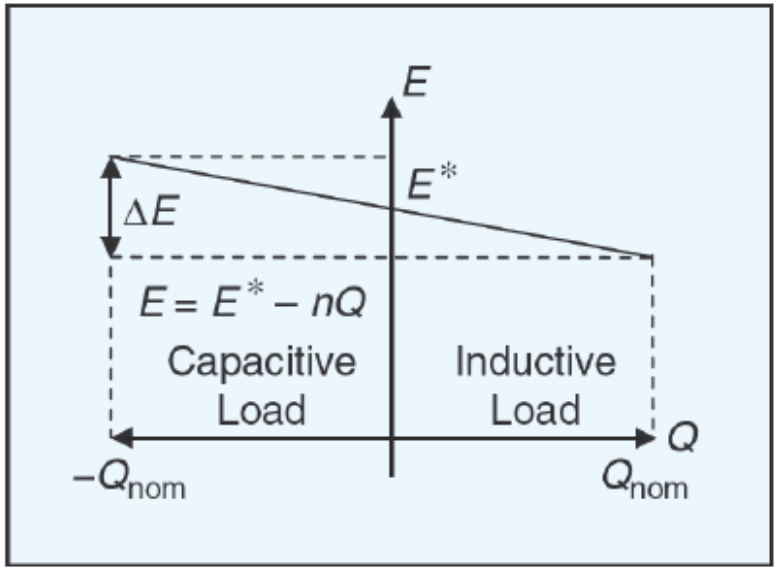

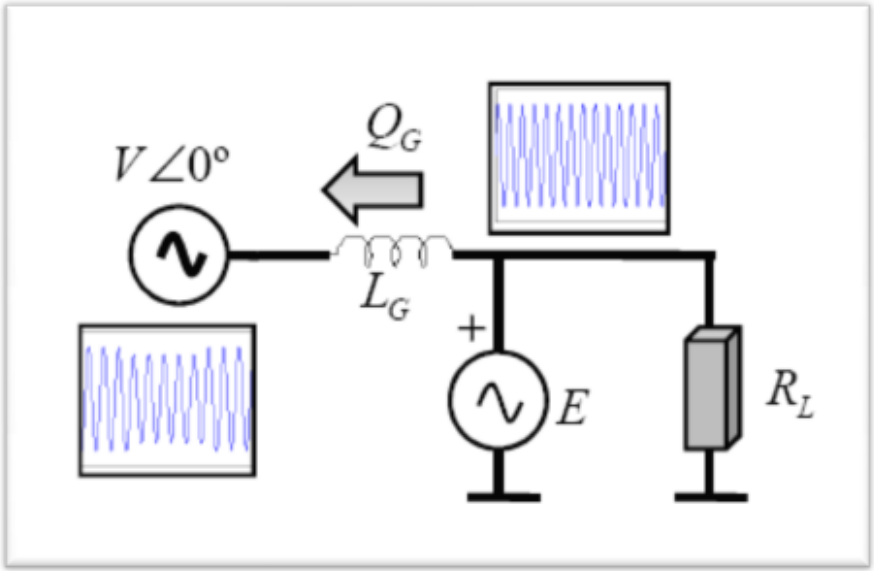

Trade-off during voltage dips: 1) voltage follower (Q=0) 2) stiff voltage source (Q high)

Microgrid Control Research

Hierarchical Control

Low voltage ride-through

- Reactive power control of a grid-connected DG.

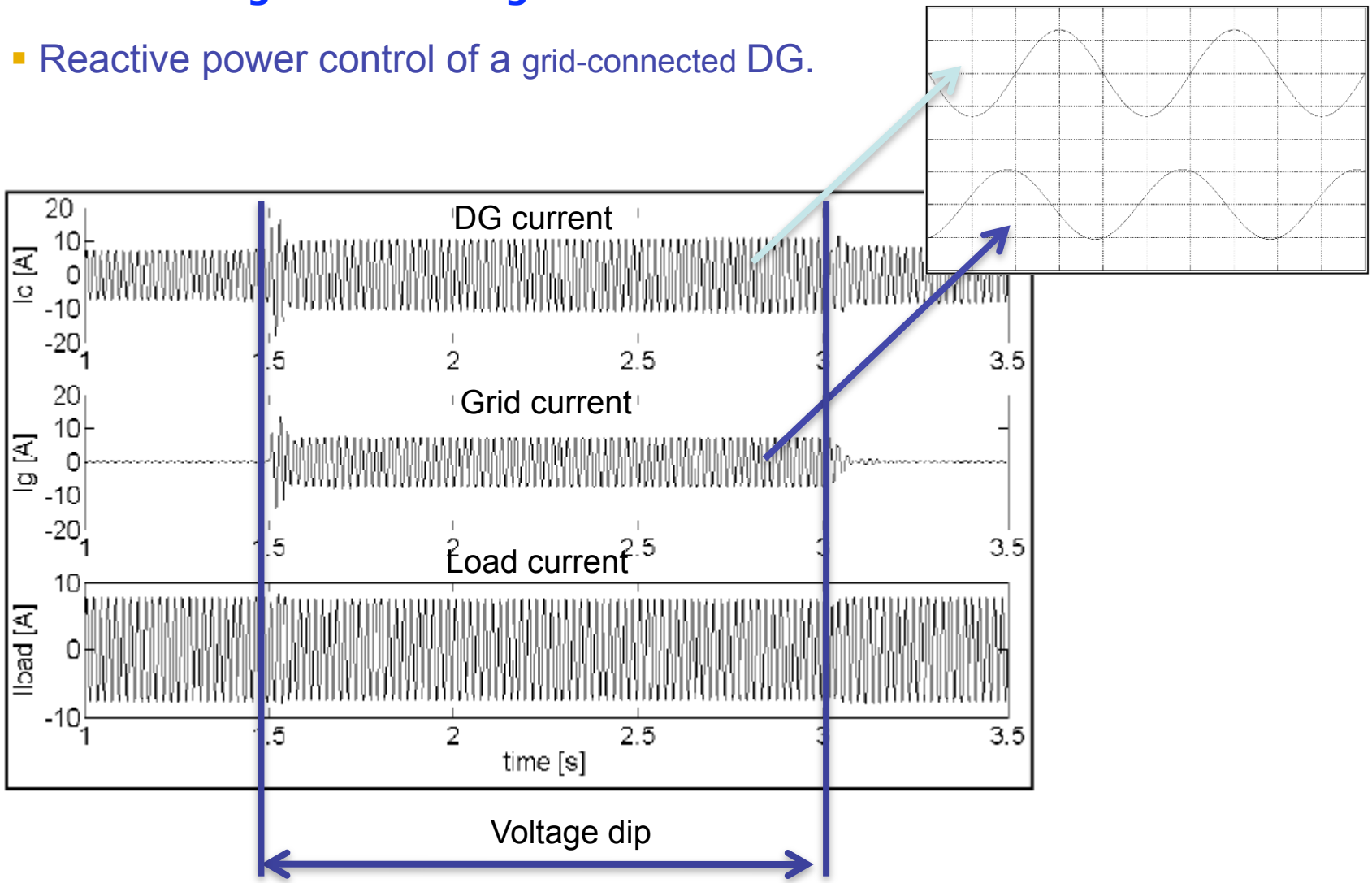

During the voltage grid, the converter injects reactive current (90º)

Microgrid Control Research

Hierarchical Control

Secondary control action

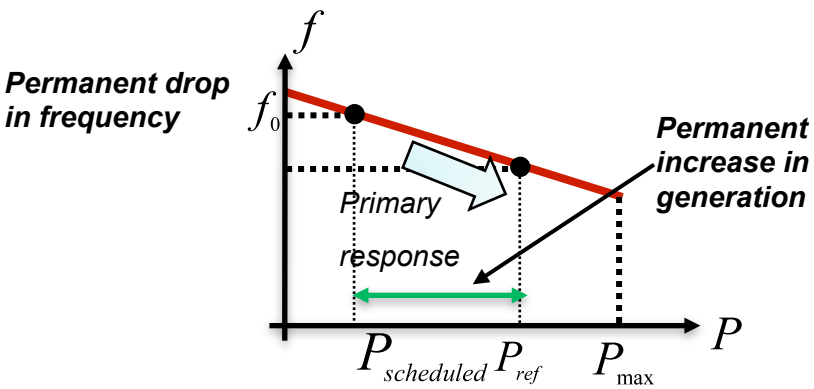

a)
No secondary control

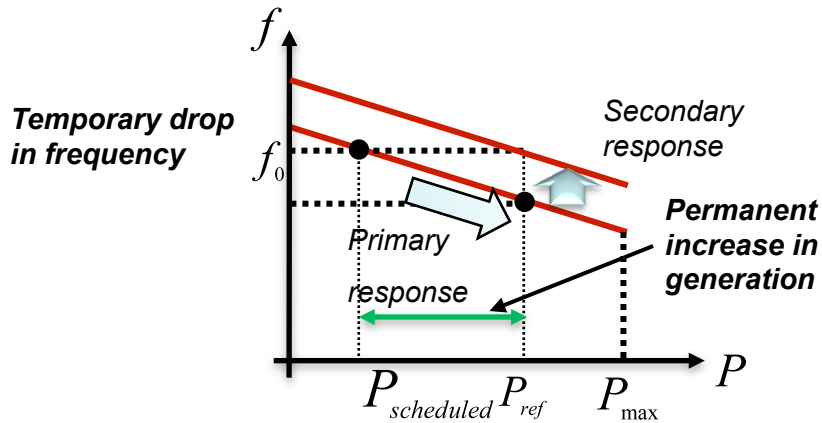

b)
Using secondary control

Primary control ensures P sharing by drooping the frequency

Secondary control:

- Restore the nominal frequency
- Cannot work localy, it needs to be centralized.

Microgrid Control Research

Hierarchical Control

- Primary and secondary control based on hierarchical management strategy

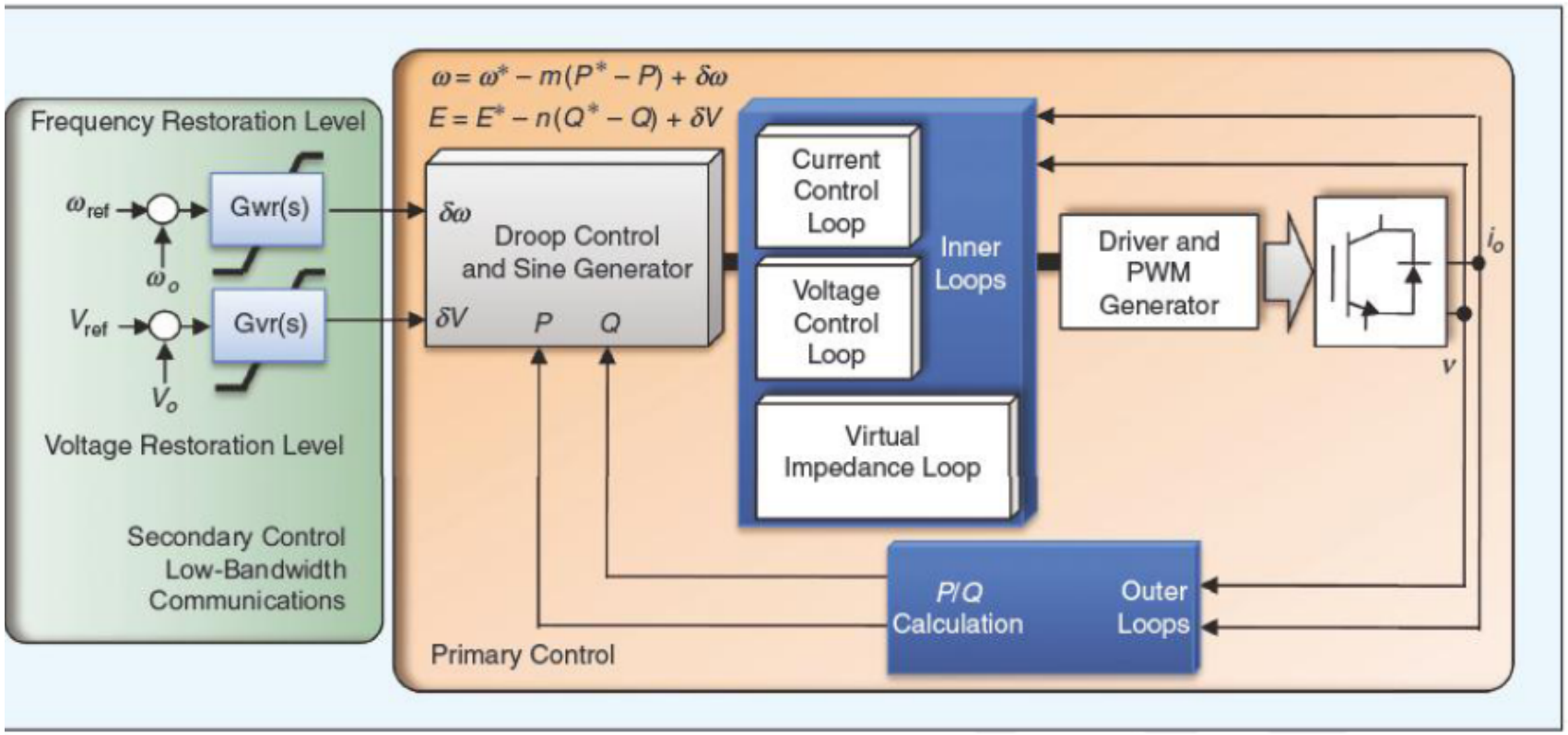

Secondary control features:

- ➢Frequency/Amplitude Restoration
- ➢PCC Power Quality improvement (Voltage Harmonics & Unbalances)
- ➢Distributed Synchronization

Microgrid Control Research

Hierarchical Control

Tertiary control for AC microgrids

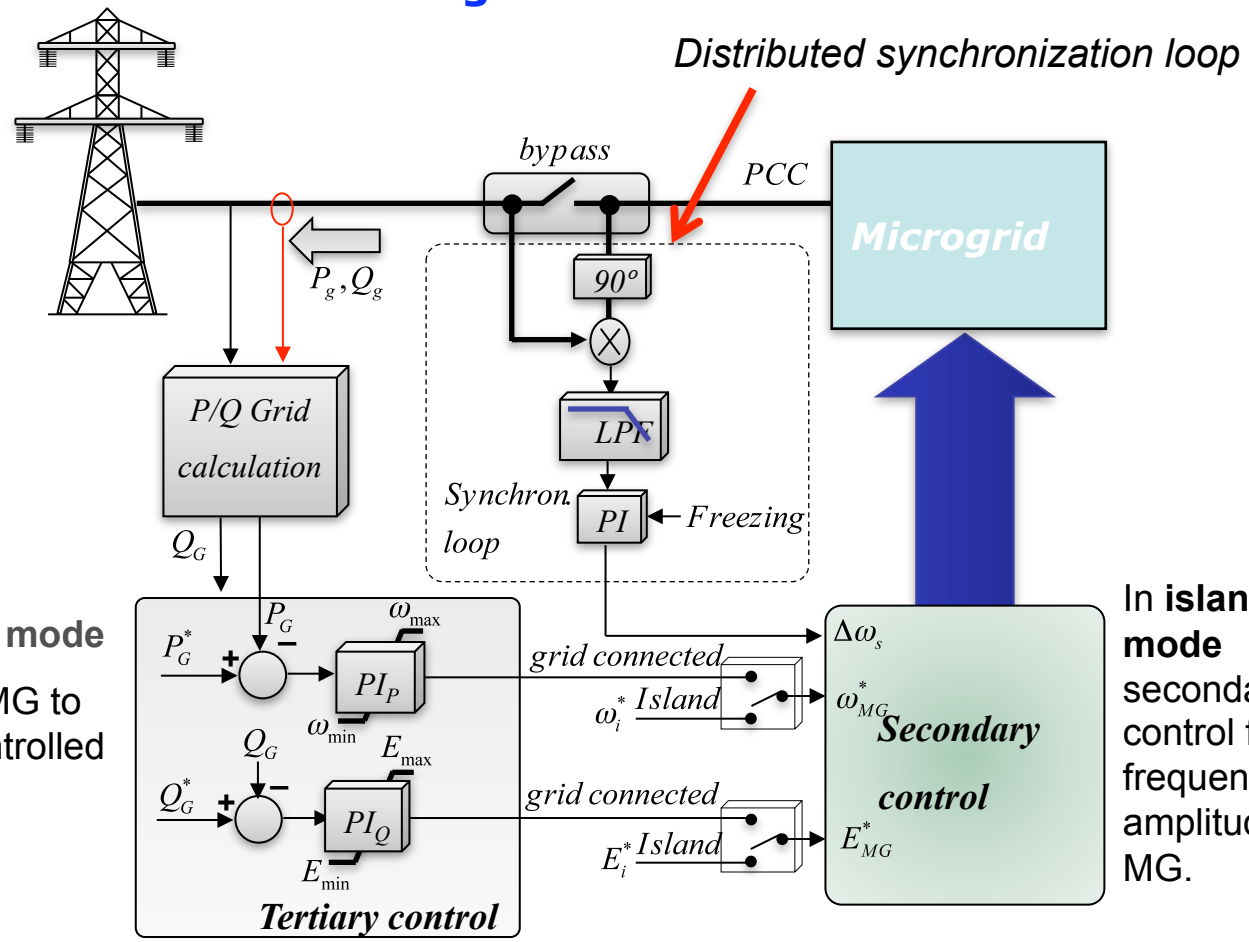

In **grid connected mode**

P and Q from the MG to the grid can be controlled by tertiary control.

In **islanded mode** secondary control fixes frequency and amplitude of the MG.

- The tertiary control generates the frequency and amplitude references for the secondary control.
- The control expressions supose an highly inductive impedance on the grid side.
- Park transformation can be used for a general impedance case.

Microgrid Control Research

Hierarchical Control

Islanding detection

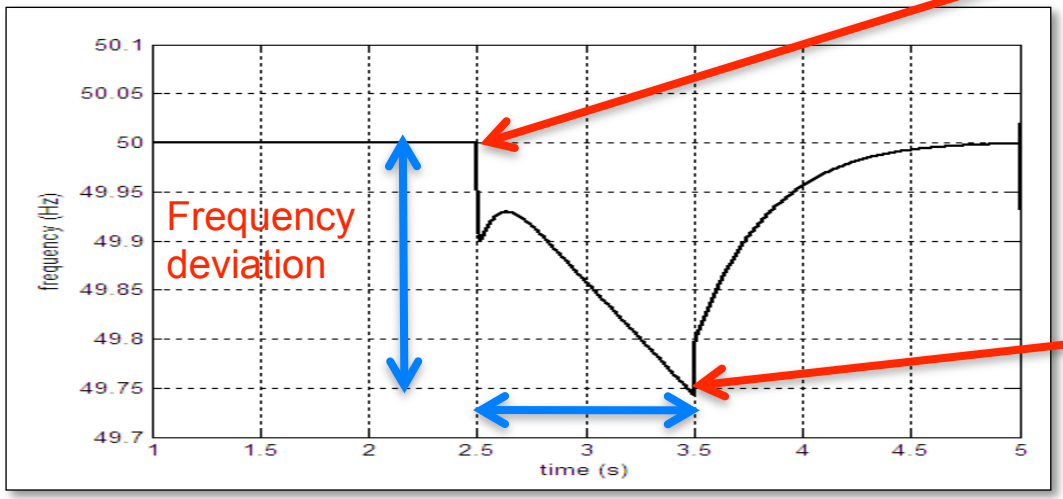

Non-planning Islanding

Islanding detection

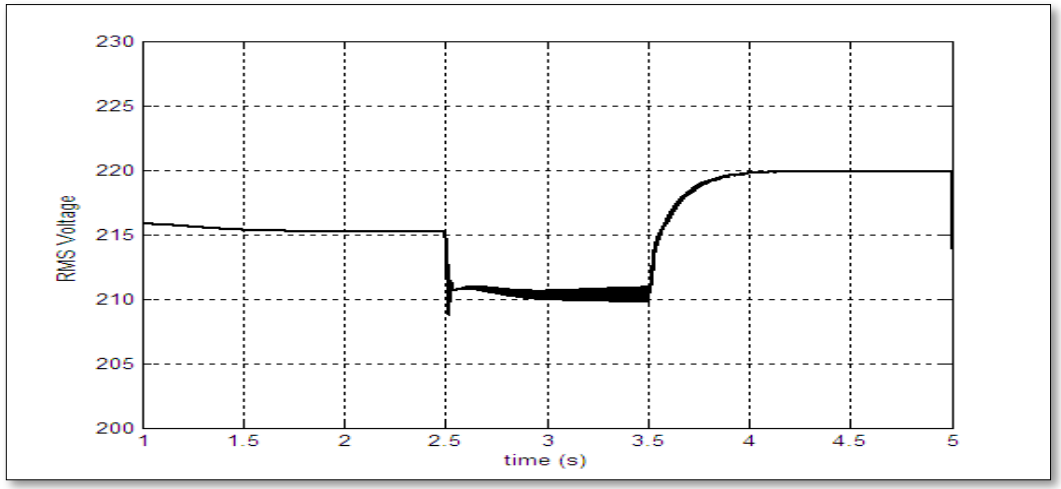

STS open (protection)

Q integrators disconnected

Microgrid Control Research

Hierarchical Control

Hybrid AC/DC microgrid

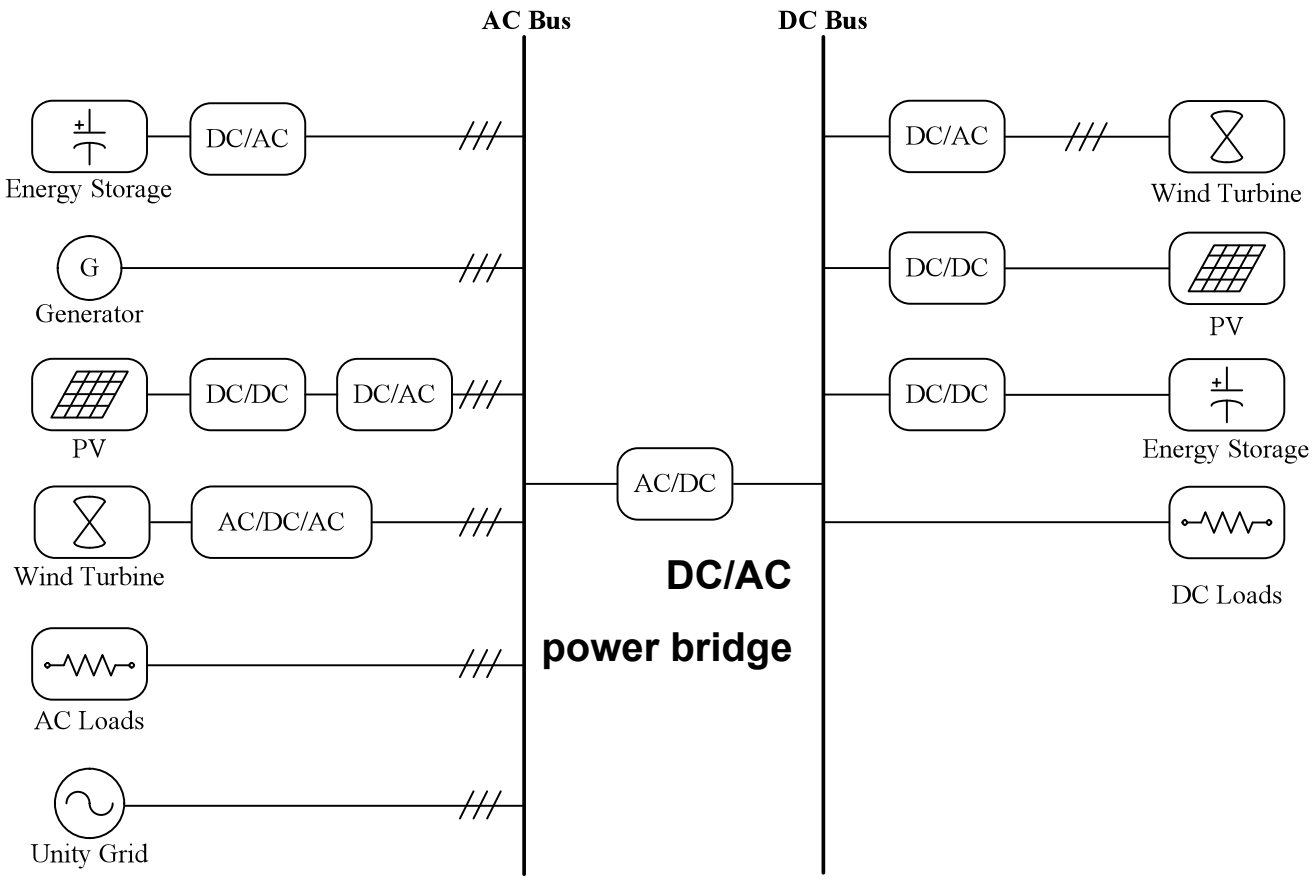

Microgrid Control Research

Hierarchical Control

Hybrid AC/DC microgrid

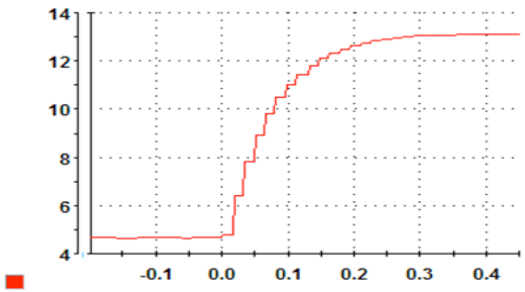

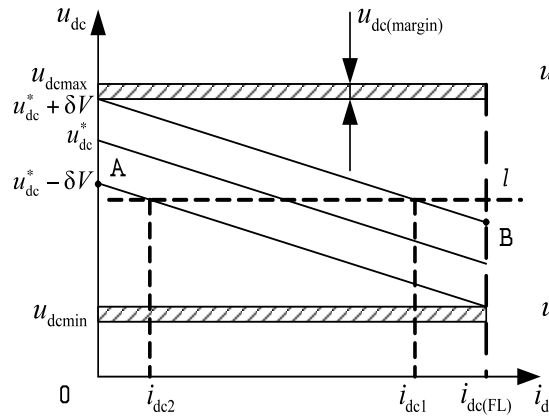

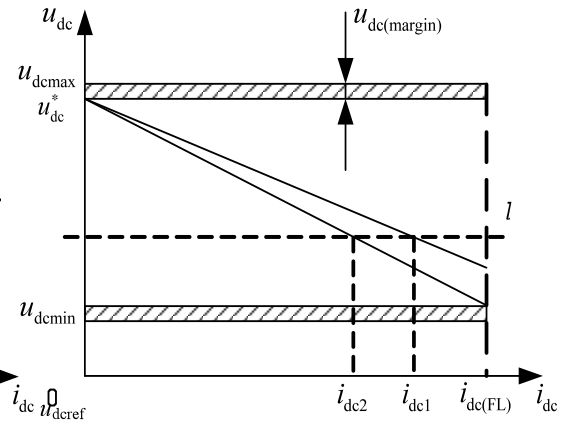

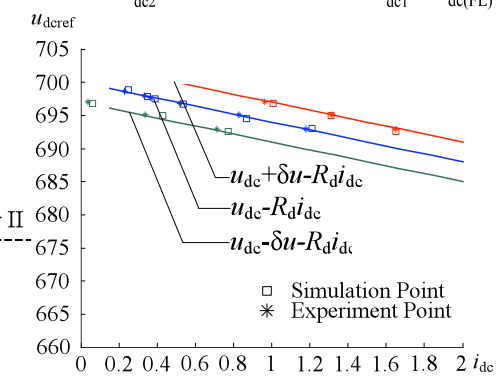

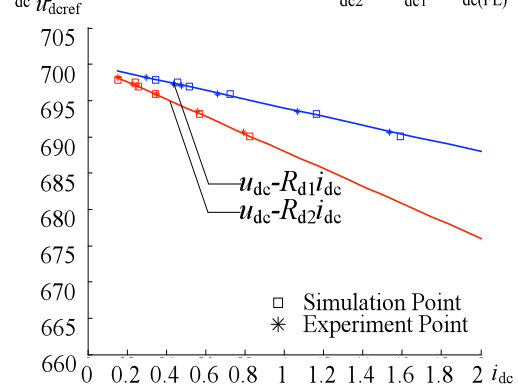

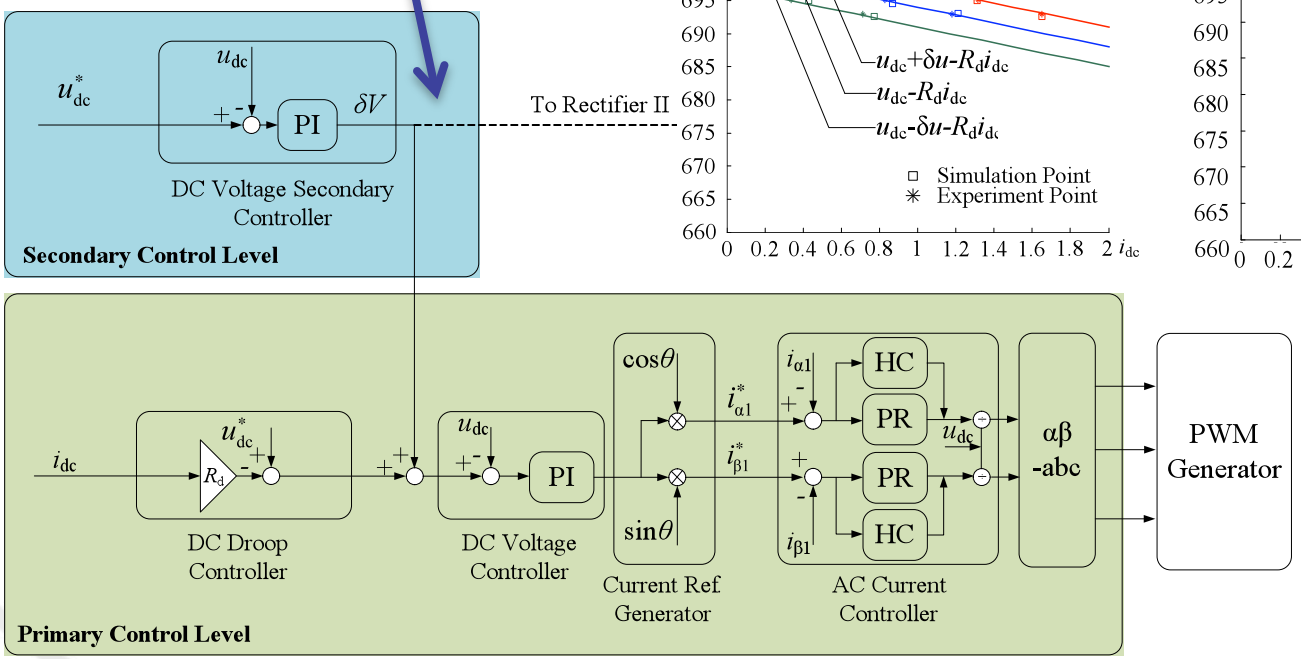

Microgrid Control Research

Hierarchical Control

Hybrid AC/DC microgrid

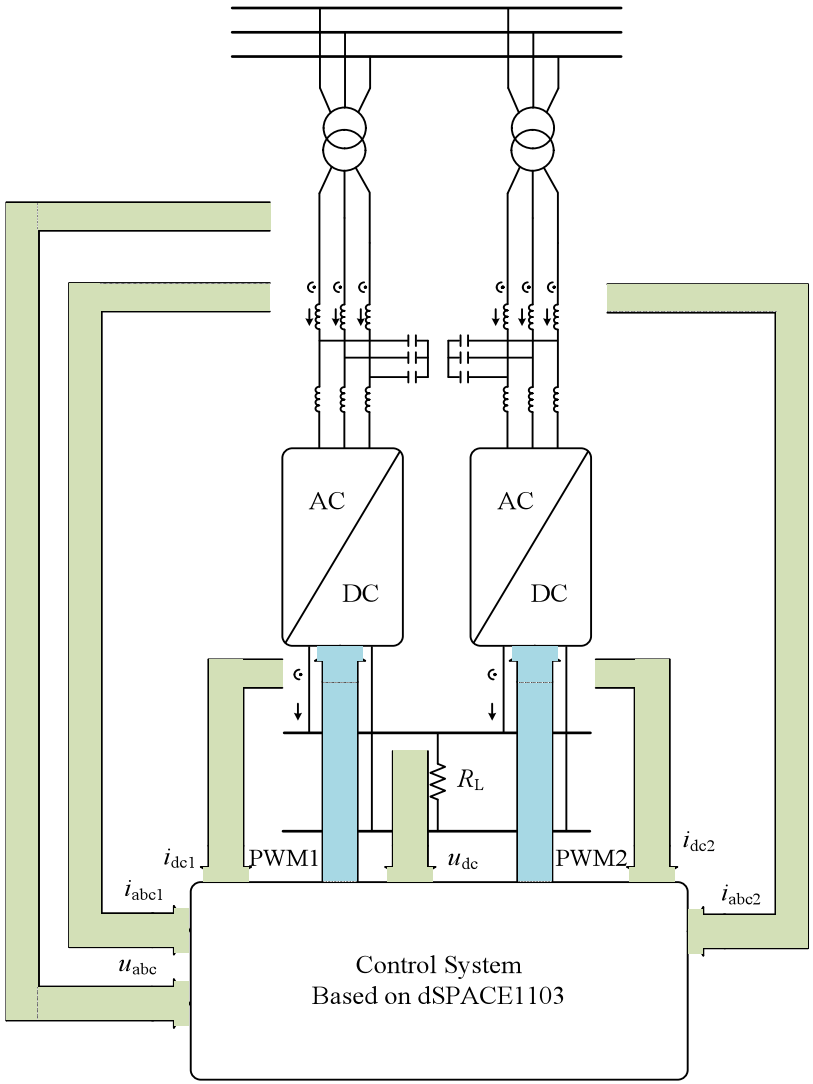

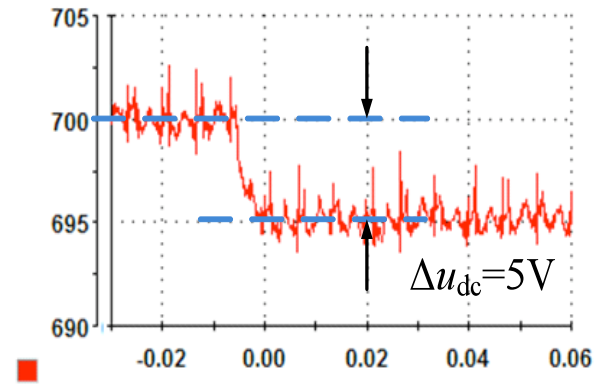

Droop Control

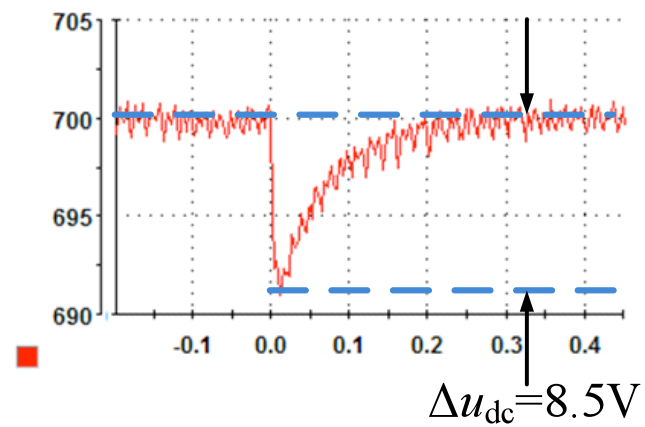

Secondary Control

Microgrid Control Research

Hierarchical Control

Microgrid clusters

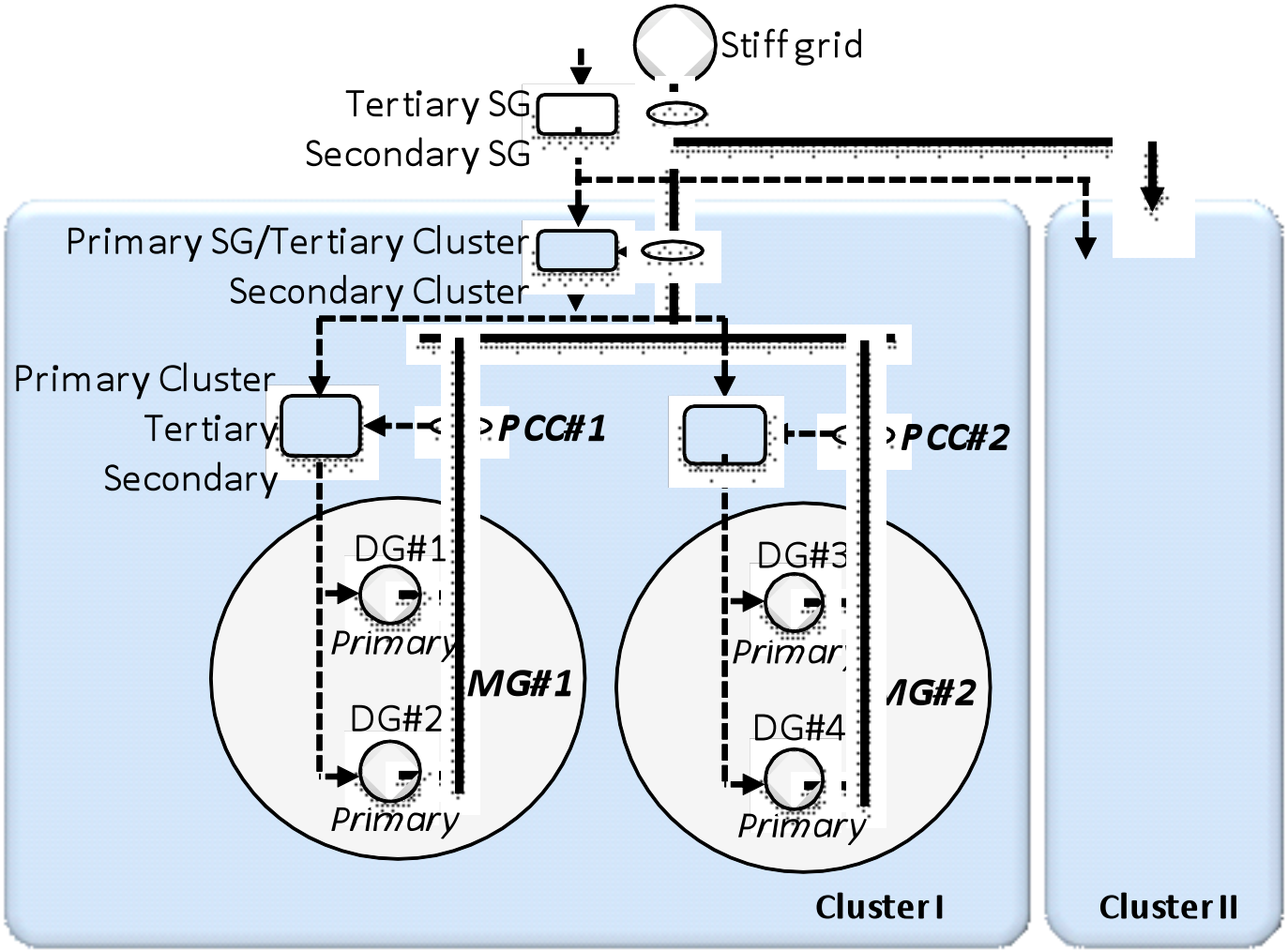

Outline

1. Aalborg University Research
2. Microgrid control research
3. **Microgrid site in Spain**

Microgrid site in Spain

350 kW Microgrid site

Microgrid site 350 kW

- PV (2x10kW)
- WT (2x20kW)
- Fuelcells (4x1.25kW)
- Diesel generator (150kW)
- Cogeneration unit
  100kW thermal
  50kW electrical
- Supercapacitors (2x500kJ)
- Flywheels
  (2MJ: 10kW@20sec)
- Li-ion batteries
  (100kW@20 min)

Horizontal and vertical axis wind turbines

Microgrid site in Spain

350 kW Microgrid site

Microgrid site 350 kW

- PV (2x10kW)
- WT (2x20kW)
- Fuelcells (4x1.25kW)
- Diesel generator (150kW)
- Cogeneration unit
  100kW thermal
  50kW electrical
- Supercapacitors (2x500kJ)
- Flywheels
  (2MJ: 10kW@20sec)
- Li-ion batteries
  (100kW@20 min)

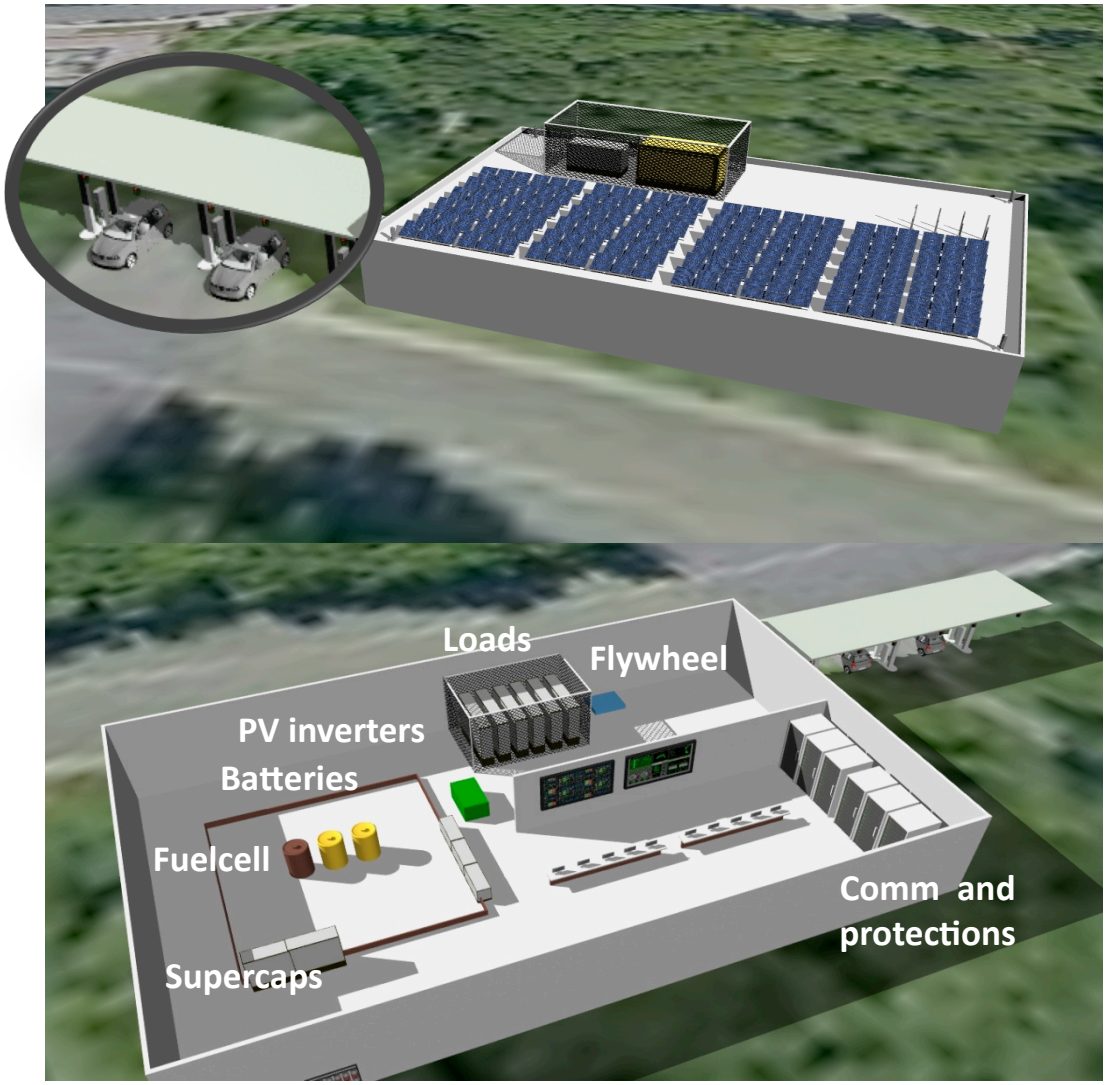

Microgrid (Source JEMA)

Microgrid site in Spain

350 kW Microgrid site

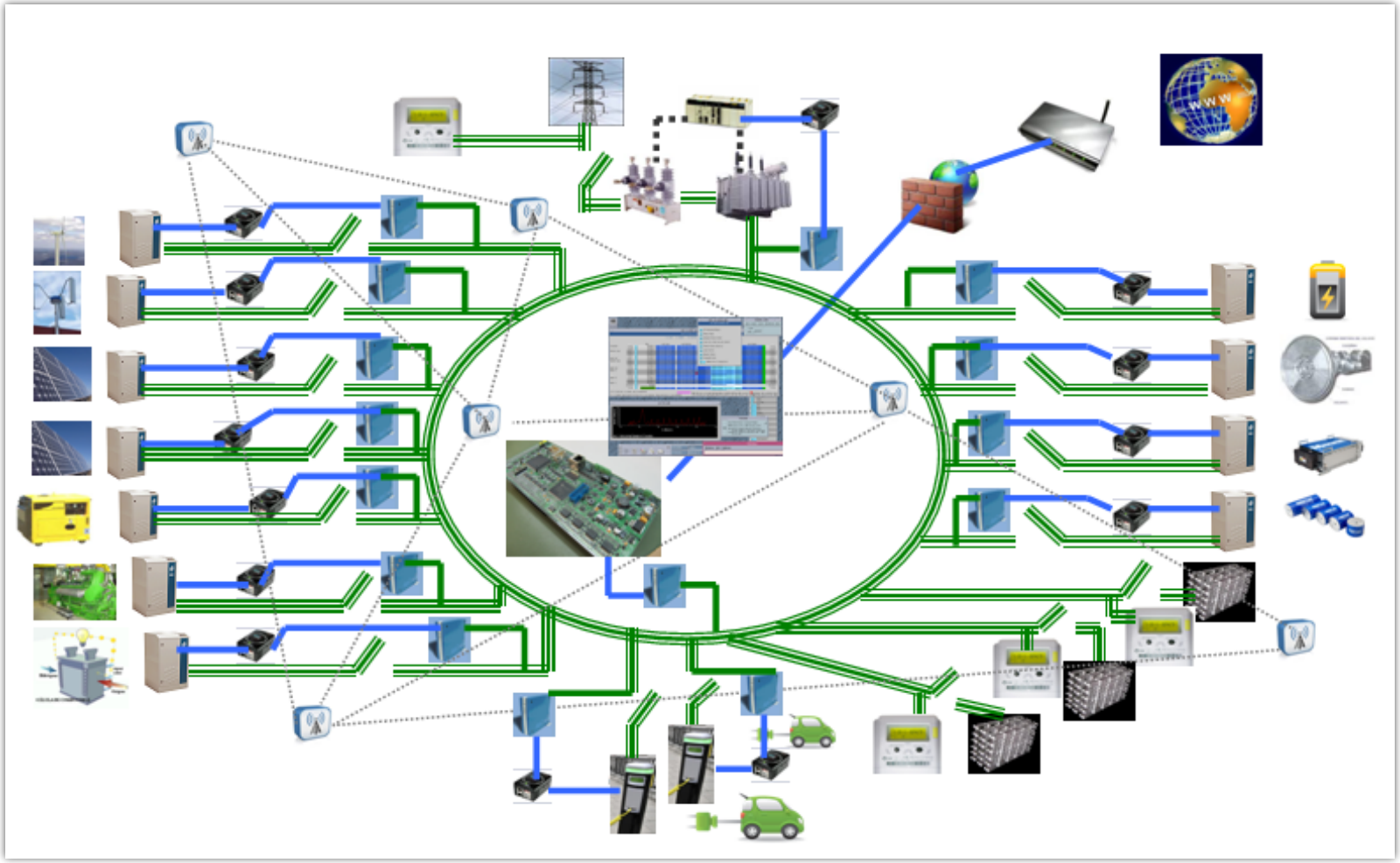

Microgrid (Source JEMA)

Summary iMG-RP in Spain & Denmark

- Aalborg University is developing research on the hierarchical control is required for a AC/DC microgrid:
  - Primary control is based on the droop method allowing the connection of different AC sources without any intercommunication.
  - Secondary control avoids the voltage and frequency deviation produced by the primary control. Only low bandwidth communications are needed to perform this control level. A synchronization loop can be add in this level to transfer from islanding to grid connected modes.
  - Tertiary control allows to import/export active and reactive power to the grid.
  - Cooperative control for Power Quality Issues: primary and secondary control for Voltage Unbalance and Harmonic Compensation
- Spain will host a Microgrid to implement and test hierarchical control for dispersed energy resources, energy storage systems, and distributed loads.