From Knowledge Generation To Science-based Innovation

INESCTEC
TECHNOLOGY & SCIENCE
ASSOCIATE LABORATORY

COORDINATED BY
INESCPORTO
PORTUGAL

Operational Characteristics of Microgrids with Electric Vehicles

Clara Gouveia, Paulo Ribeiro, Carlos Moreira, **João Peças Lopes**
INESC TEC – INESC Technology and Science (formerly INESC Porto)

Microgrid Concept

The MG hierarchical management and control structure provides the pathway for the massive deployment of **Electric Vehicles** and **Microgeneration units**.

- The resources connected to the MG are coordinated trough the MG management and control system.
- The MG management and control system is organized in two main layers:
  - **Microgrid Central Controller** –MGCC
  - **Network of local controllers**

Microsource Controller (MC)

Electric Vehicle Controller (MC)

Load Controller (LC)

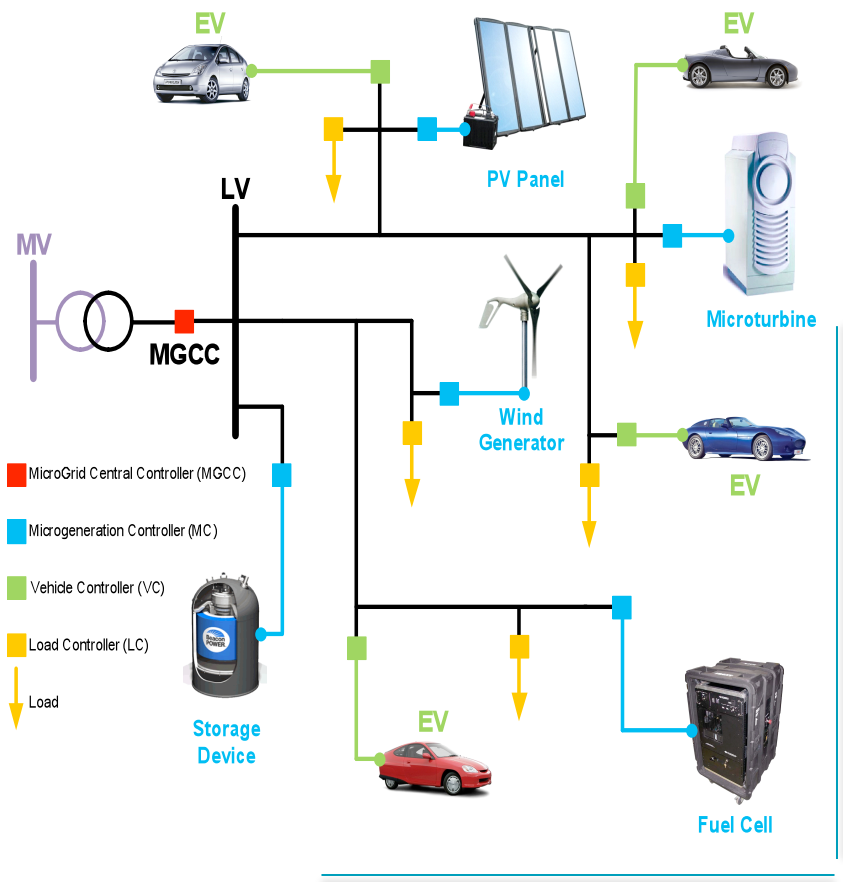

Microgrid Emergency Operation - Challenges

- The coordination of its resources and loads allows it to operate:
  - Interconnected to the MV network – **Normal Operating Mode**
  - Isolated from the main grid – **Emergency Operating Mode**

- The unplanned MG islanding procedure is quite challenging, since the MG experiences severe voltage and frequency variations due to the unbalance between load and generation.

- The successful MG islanded operation relies in the combination:
  - **Primary frequency regulation** – provided by the VSI
  - **Secondary frequency regulation** – provided by the controllable MS such as microturbines or fuel cells.
  - **Load shedding schemes** – in order to provide the balance between the MG load, µG and storage unit capacity .

- Since the time of response of the controllable MS is slow, the MG primary frequency regulation relies on the <u>MG storage capacity</u>.

The MG has the potential to increase the systems security.

INESCTEC
TECHNOLOGY & SCIENCE | ASSOCIATE LABORATORY
COORDINATED BY INESCPORTO PORTUGAL

Integrating EV in the Microgrid Operation

- When connected to the network, the EVs can be viewed as:
  - Controllable loads– **Smart charging strategies**
  - Distributed storage units– **Vehicle to grid (V2G)**
- The EV control strategy adopted in this paper is based on the P-ω droop control strategy. The EVs change their power output when the frequency becomes out of a defined dead band:

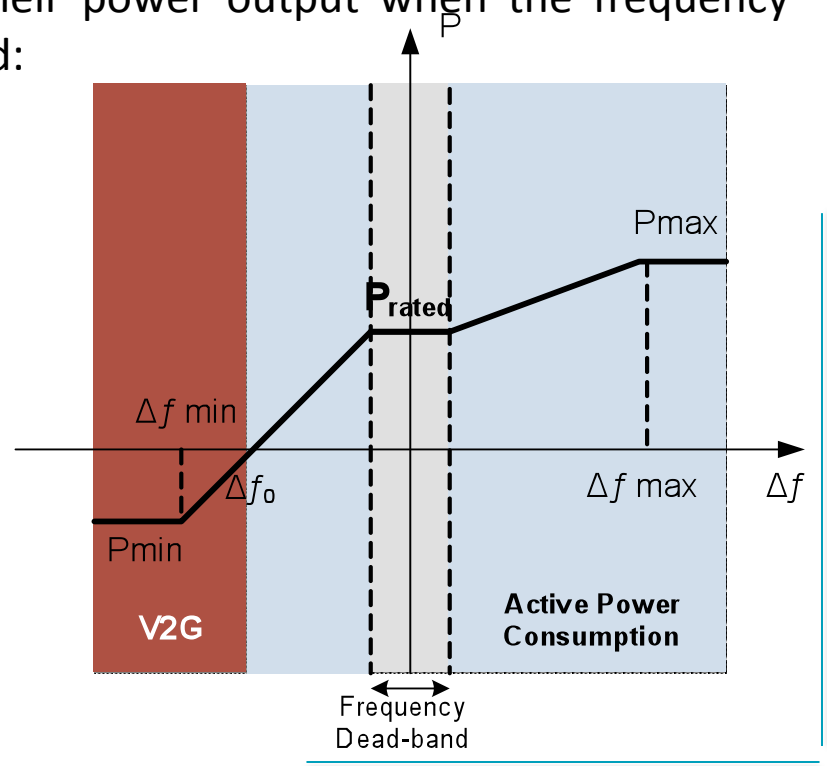

- **Increase power consumption -** when there is an increase in the systems frequency.
- **Reduction on power consumption** - for frequencies below the dead-band minimum.
- **EV injects power (V2G)** –For frequencies bellow f0.

Microgrid – Mitigating Voltage Unbalance

- The LV network is operated under unbalanced conditions, due to the uneven connection of single-phase loads and MS to the three-phases of the system.
- When operating in islanded mode, the MG is more sensitive to this problem:
  - Decreasing the life-time and efficiency of three-phase loads.
  - Compromise the MG synchronization with the MV network.

Voltage Balancing Mechanism

The main storage unit is equipped with a four-leg Voltage Source Inverter (VSI) which:

- Provides **three independent output reference voltages**, regardless of the MG loading conditions.
- **Reduces** the **unwanted negative and zero sequence components of voltage**.

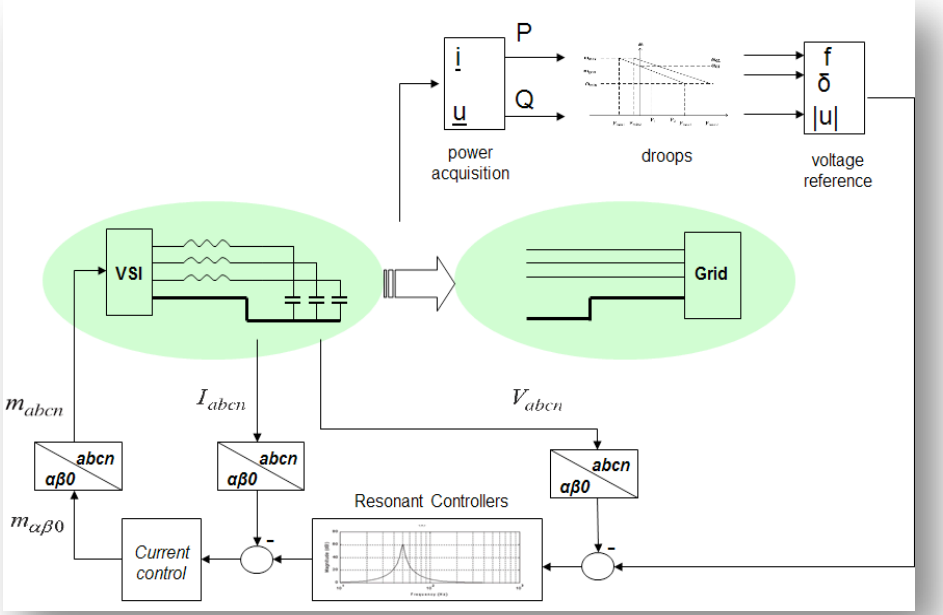

Integrating EV in the Microgrid Operation

- The main goal of this study is to demonstrate the:

Benefits provided by the EV active participation on the MG frequency regulation during emergency operation

- The adoption of innovative EV control strategies has the potential to:
  - Improve the MG frequency regulation
  - Increase the safe integration of MS in islanded mode
  - Reduce the main storage unit solicitation
  - Smooth the MG transition to islanding operation
  - Enhance the MG resilience
- The majority of EV charging interfaces are single-phase therefore it is also necessary to deal with the unbalanced nature of the low voltage networks, testing the effectiveness of voltage balance mechanisms.
- The dynamic behavior of the overall MG was evaluated using a simulation platform developed on a *Matlab/Simulink* environment through the use of the *Sympowersystems* toolbox and user-defined models.

INESCTEC
TECHNOLOGY & SCIENCE | ASSOCIATE LABORATORY
COORDINATED BY INESCPORTO PORTUGAL

Microgrid Simulation Scenarios – Urban Scenario

Characterization

- The urban Low Voltage network is constituted mainly by underground cables.
- Both three-phase and single-phase loads were considered.
- Only three-phase single-shaft microturbines were considered.
- Approximately 60% of the loads were integrated in a under-frequency load shedding scheme.

	Type of Connection				
	3~	A	B	C	Total
Load (kW)	38,5	69,8	32,4	37,1	177,8
MS (kW)	150	0	0	0	150
E.V. (kW)	0	22,3	24,3	6,73	57,7

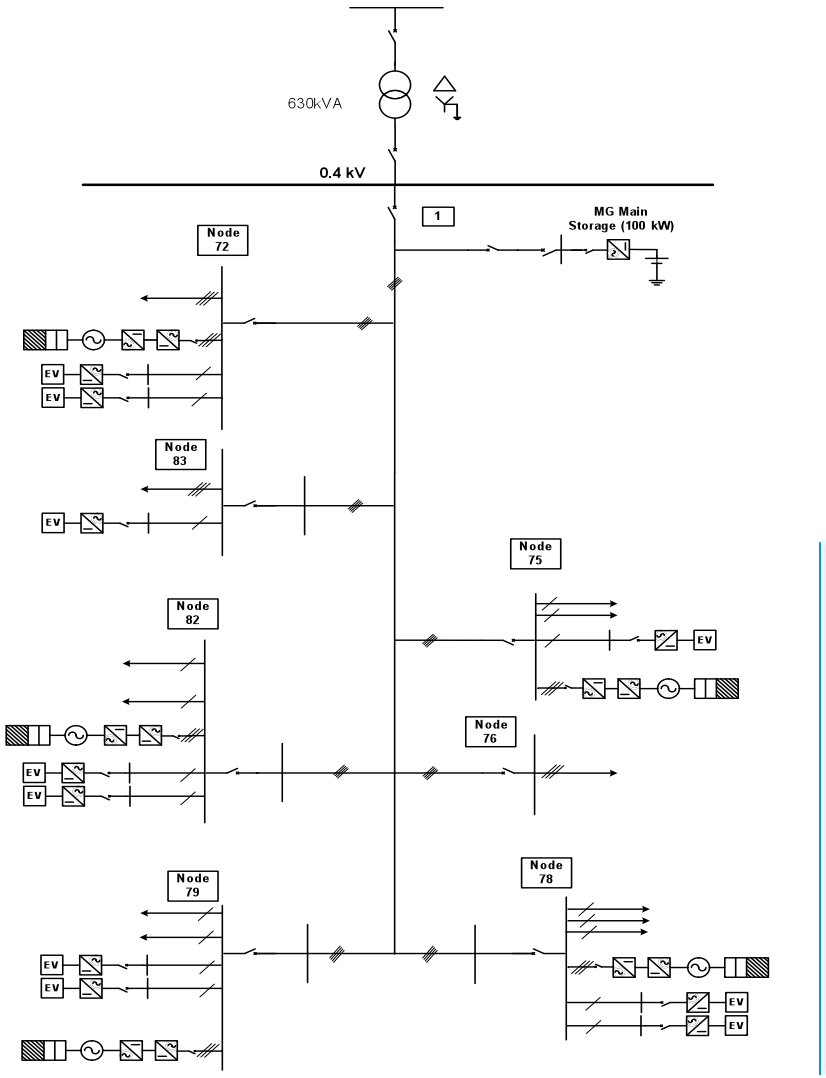

Microgrid Simulation Scenarios – Rural Scenario

Characterization

- The Rural Low Voltage network is constituted mainly by aerial lines.
- Both three-phase and single-phase loads were considered.
- Both three-phase and single-phase power production was considered.
- Approximately 80% of the loads were integrated in a under-frequency load shedding scheme.

	Type of Connection				
	3~	A	B	C	Total
Load (kW)	87,9	44,4	38,3	46,6	217,2
MS (kW)	90	25,5	31,7	38,5	185,7
E.V. (kW)	0	21,9	19,6	17,6	59,1

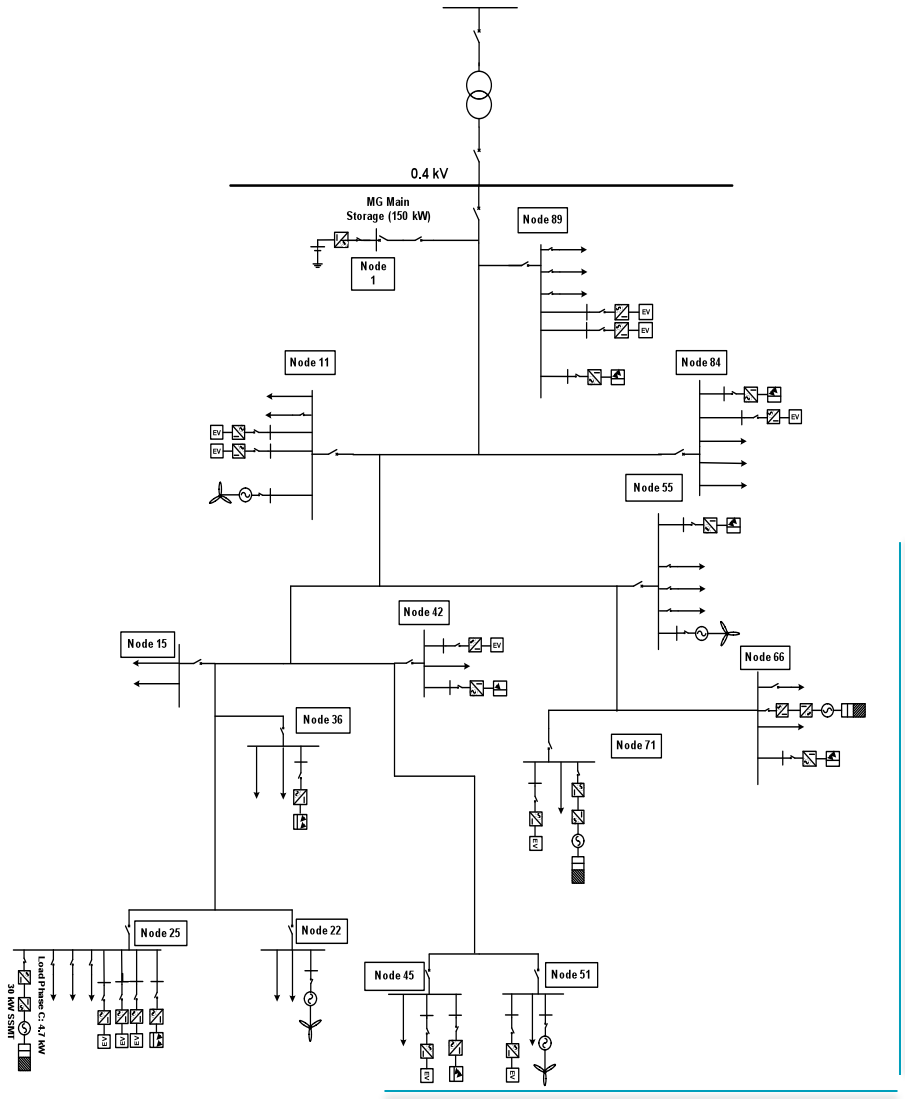

Microgrid Islanding Procedure

- An unplanned islanding was simulated for t=10 s of the simulation time.
- In both scenarios the MG was importing power from the MV network.
- In order to avoid the MG collapse a under-frequency load shedding scheme was implemented.
- The EV will also participate in the MG frequency regulation according to the active power-frequency droop characteristic adopted.

Frequency-Droop Parameters	Values
Nominal Frequency (Hz)	50
Zero-Crossing Frequency (Hz)	49.5
Maximum Frequency (Hz)	51
Minimum Frequency (Hz)	49
Frequency Dead-band (Hz)	0.2

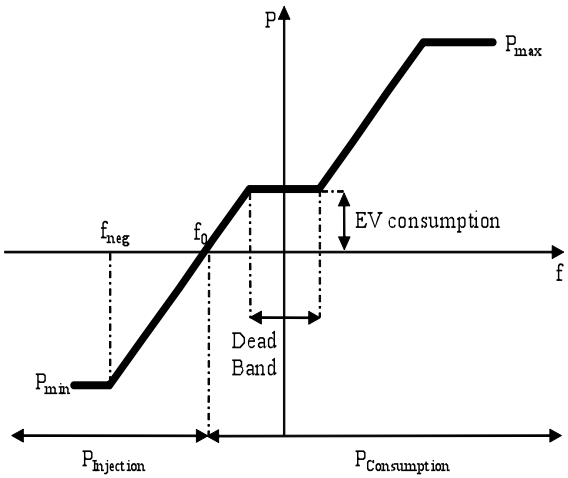

Microgrid Frequency Response with EV

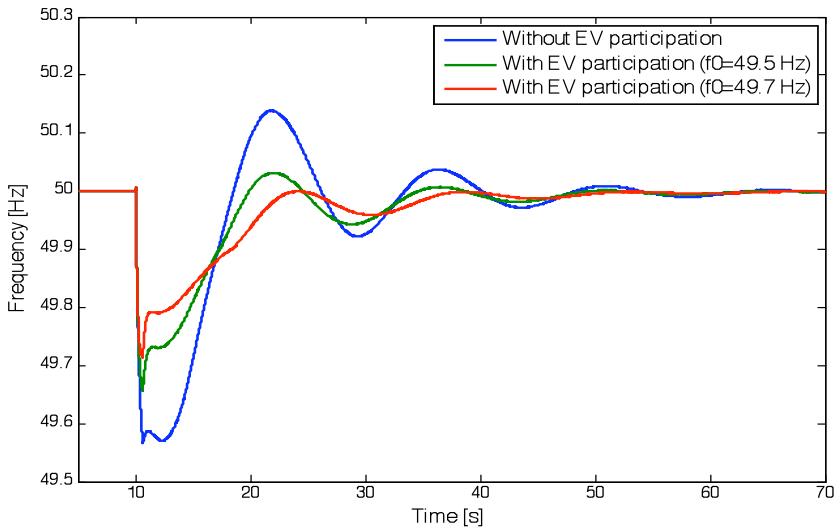

The EV participation significantly reduces the initial frequency deviation and the **time necessary to recover the frequency to its nominal value** (50 Hz).

- The participation of EV occurs during the first moments after the islanding, compensating the slower response of the Single-shaft micro-turbines.
- The reduction of EV consumption was sufficient to ensure a smother transition to islanding operation.
- Increasing the zero-crossing frequency (f0) will force the EVs to inject power into the system.

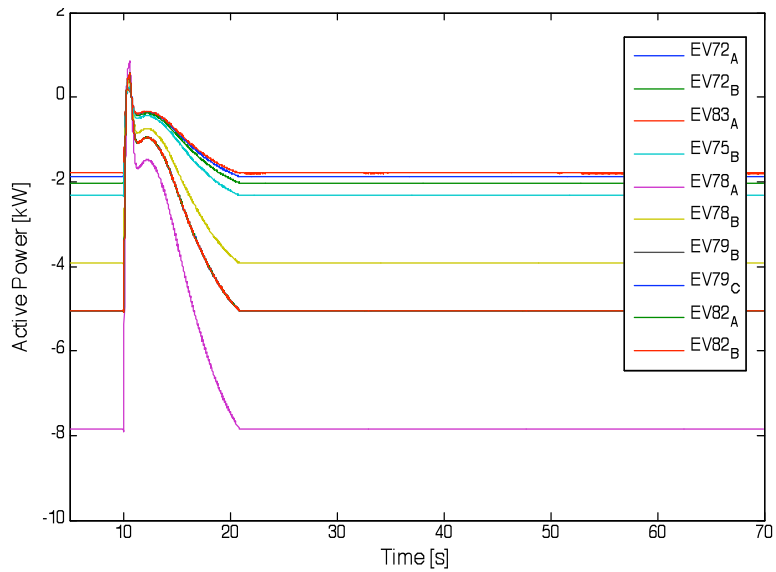

Impact on the MG Storage Unit

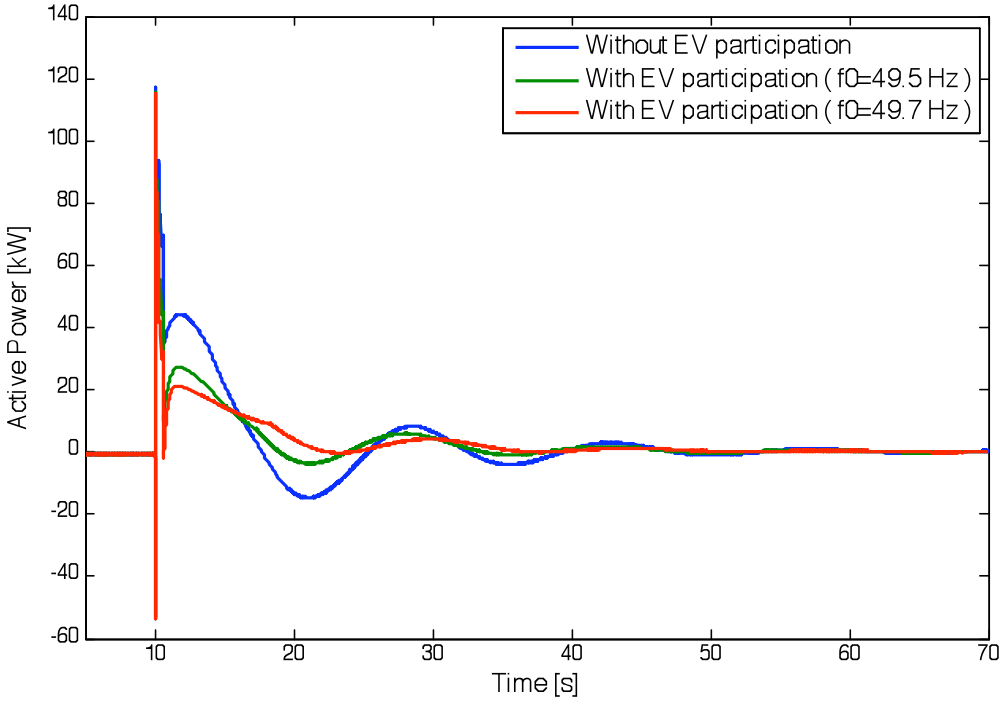

The participation of EV **reduces the total power injected by the MG storage unit(s)**, necessary to compensate the unbalance between load and generation.

Impact on the MG Controllable MS

Without the participation of EV

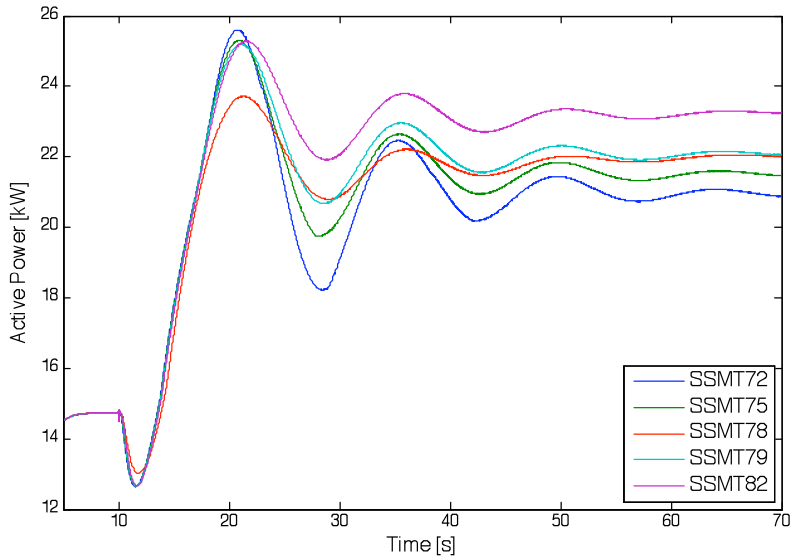

With the participation of EV

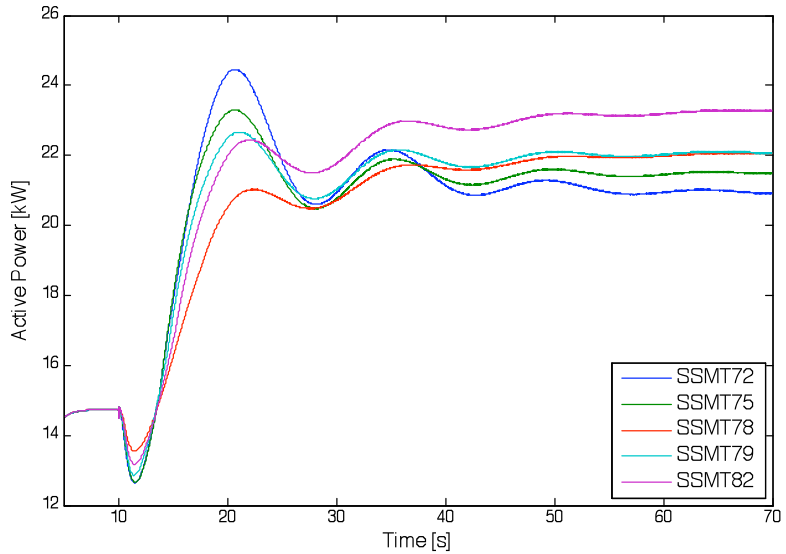

- The response of the SSMT for the secondary frequency regulation is more stable and the increase on the SSMT power output required is smaller.
- The final power output from the SSMT is the same in both cases since the EV return to their initial rate of charge when the frequency becomes within the frequency dead-band.

MG load following capability

MG Frequency Response

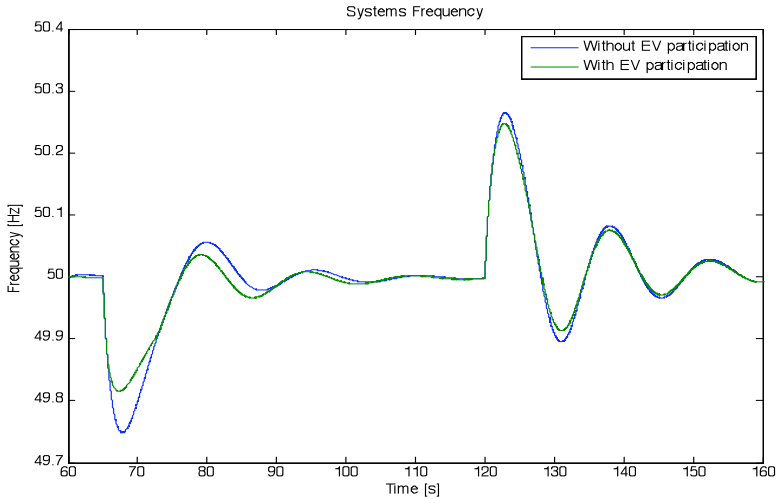

EV active power response

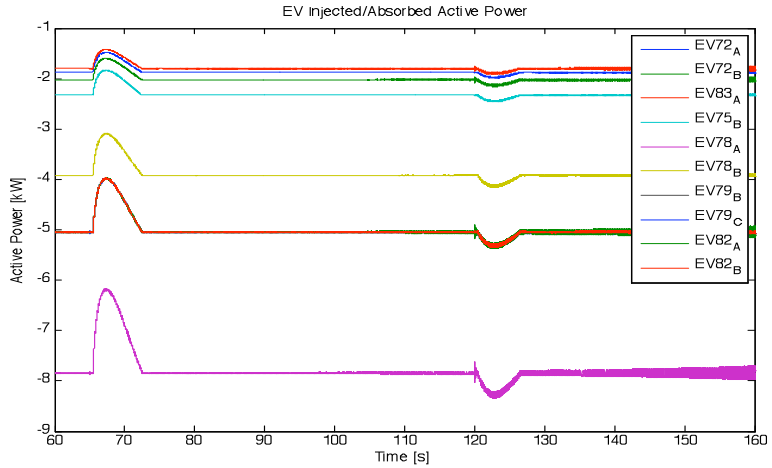

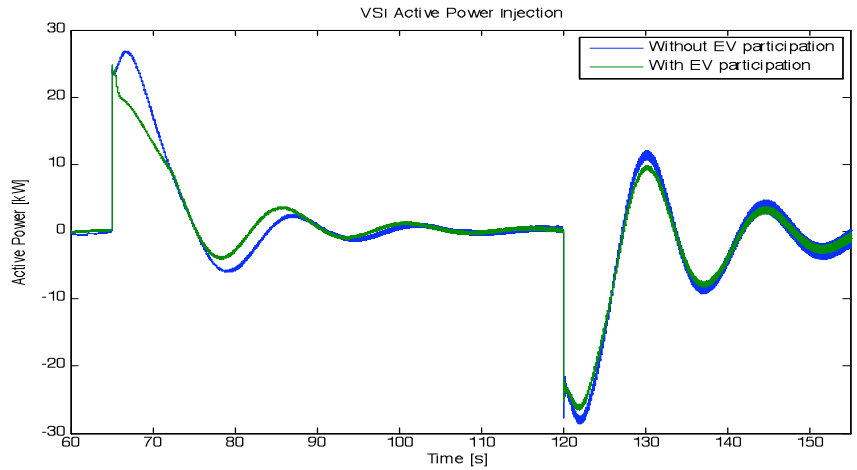

Analyzing the MG Voltage Unbalance

- Voltage unbalance was studied for both simulation scenarios. Two cases were considered:
  - **Base case -** The main storage unit is connected to the MG through a three-leg inverter with frequency and voltage droops;
  - **Second case -** The VSI is a four-leg inverter with a balancing unit.

- The benefits of the balancing unit will be quantified by the voltage unbalance factor (%VUF).

Standard EN50160

$$\%VUF = \frac{V_2}{V_1} < 2\%$$

V_1– pos. seq. voltage

V_2– neg. seq. voltage

- However, the rural MG presented higher voltage unbalance since it is constituted by long aerial lines with dispersed loads and has a considerable amount of single-phase MS.

INESCTEC
TECHNOLOGY & SCIENCE | ASSOCIATE LABORATORY
COORDINATED BY INESCPORTO PORTUGAL

Effectiveness of the Voltage Balancing mechanisms

%VUF at the VSI terminals with the balancing unit

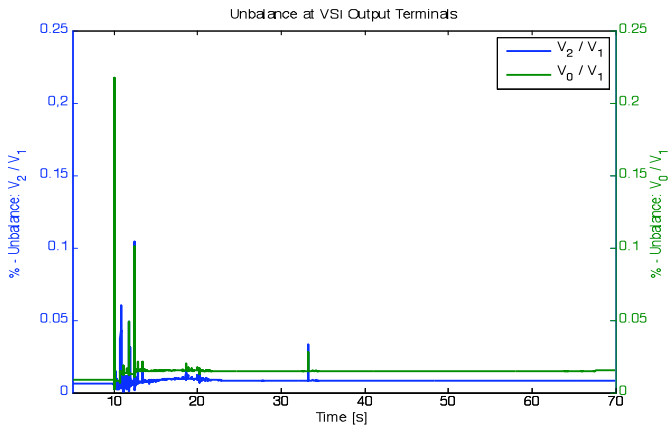

%VUF at the VSI terminals Without the balancing unit

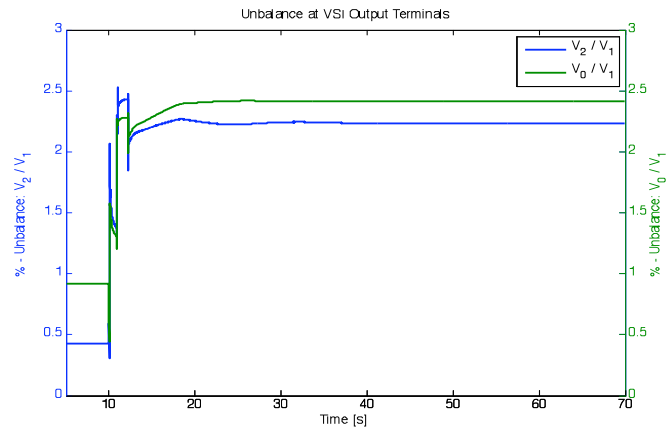

RMS Voltage at the VSI terminals with the balancing unit

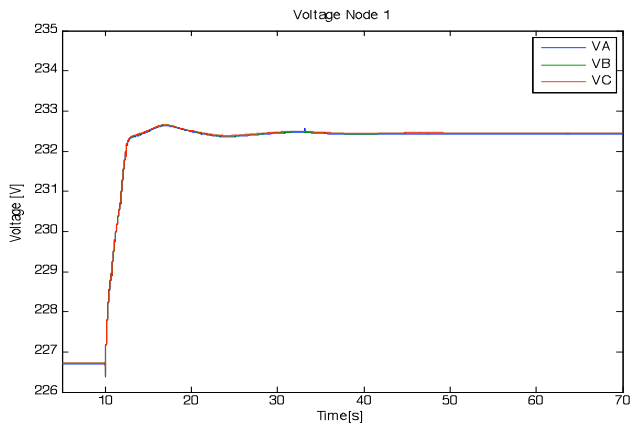

RMS Voltage at the VSI terminals Without the balancing unit

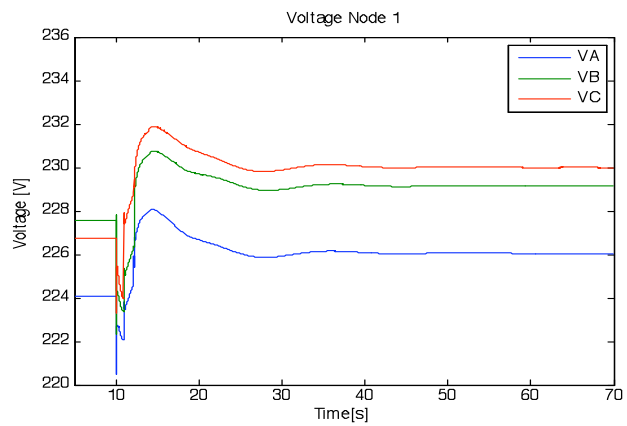

The implementation of a balancing unit allows the **elimination of unwanted negative and zero sequence voltage** components at the VSI terminals. Improvements in voltage unbalance factors are achieved in all MG nodes.

Conclusions

Improvements in MG emergency operating conditions:

- The implementation of the EV frequency control strategy leads to a smoother MG transition from the interconnected mode to unplanned islanding.
- The active participation of EV provides an additional power/frequency support for the restoration phase regarding load following.
- It was demonstrated that in both scenarios the adoption of the EV frequency control strategy can reduce the main storage solicitation.

The active participation of EV during emergency conditions increases the MG resilience

Conclusions

Improvements in MG voltage balancing:

- At the VSI terminals, the balancing unit is able to eliminate the undesirable negative and zero sequence voltage components (%VUF <0.05%). This will allow the secure re-synchronization with the utility grid.
- In the other MG nodes a significant reduction in voltage unbalanced was also achieved, thus improving MG power quality.
- The influence of the balancing unit depends on its relative position to the unbalanced load/source, and on the characteristics of the LV grid.
- Additional voltage balancing mechanisms may be required in order to mitigate local voltage unbalance.

INESCTEC
TECHNOLOGY & SCIENCE | ASSOCIATE LABORATORY
COORDINATED BY INESCPORTO PORTUGAL