Coordination Control of Shipboard Microgrids

(This work is by collaboration with Prof. Josep (AAU) and Prof.Su (Taiwan Maritime University)

Xiao Zhao-xia

Tianjin Polytechnic University

Email: xiaozhaoxia@tjpu.edu.cn

天津工業大學

TIANJIN POLYTECHNIC UNIVERSITY

Outline

- State-of-the-art in Shipboard Microgrid
- Bow Thruster in Shipboard Microgrid
- Coordination control of a Hybrid Electric Ferry

Outline

- State-of-the-art in Shipboard Microgrid
- Bow Thruster in Shipboard Microgrid
- Coordination control of a Hybrid Electric Ferry

State-of-the-art in Shipboard Microgrid

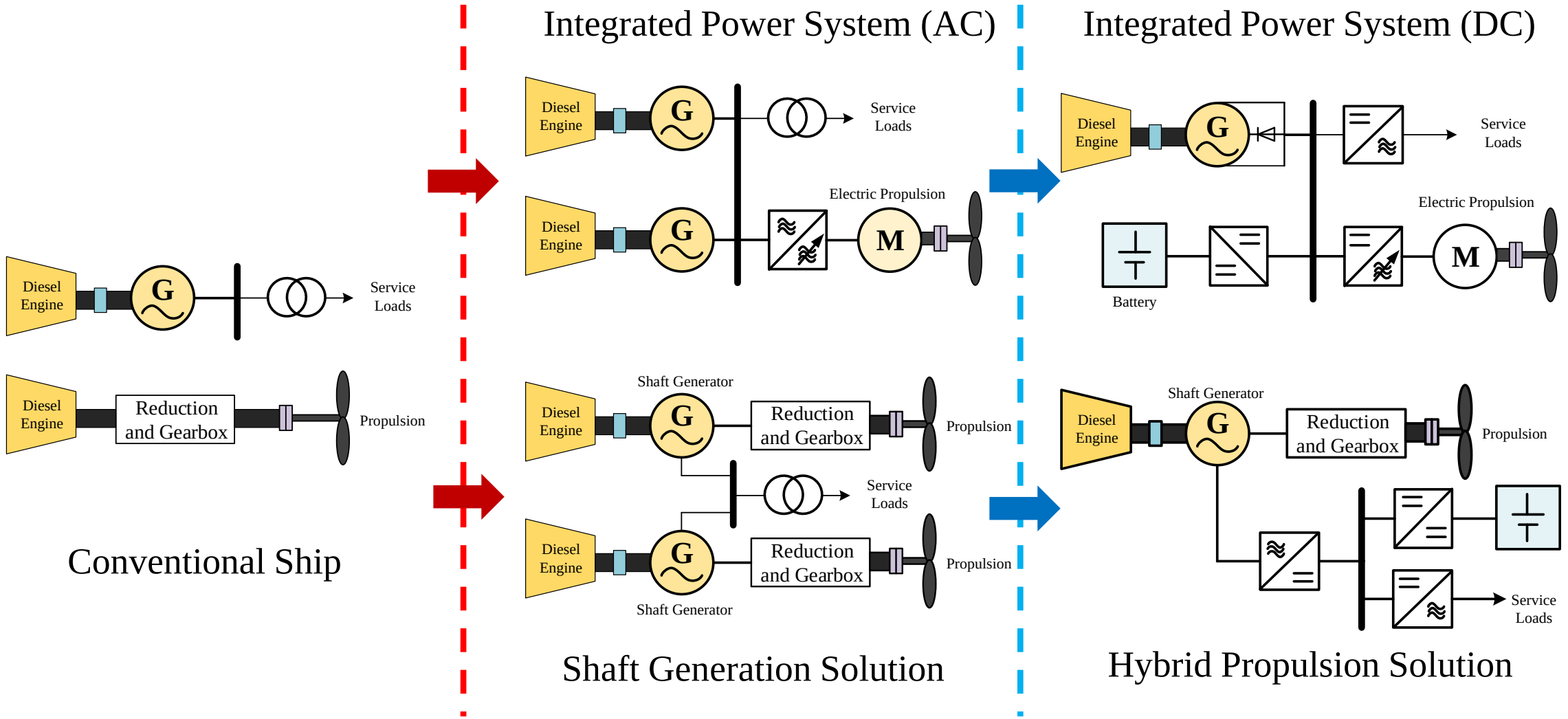

Growing demand of electricity

Energy storage

State-of-the-art in Shipboard Microgrid

ABB's Onboard DC Grid technology

NKT Victoria

DC distribution technology can save up to 27% of fuel, and while 14% more of fuel can be saved in Dynamic Position (DP) mode, while the engine room noise can be reduced by 30%.

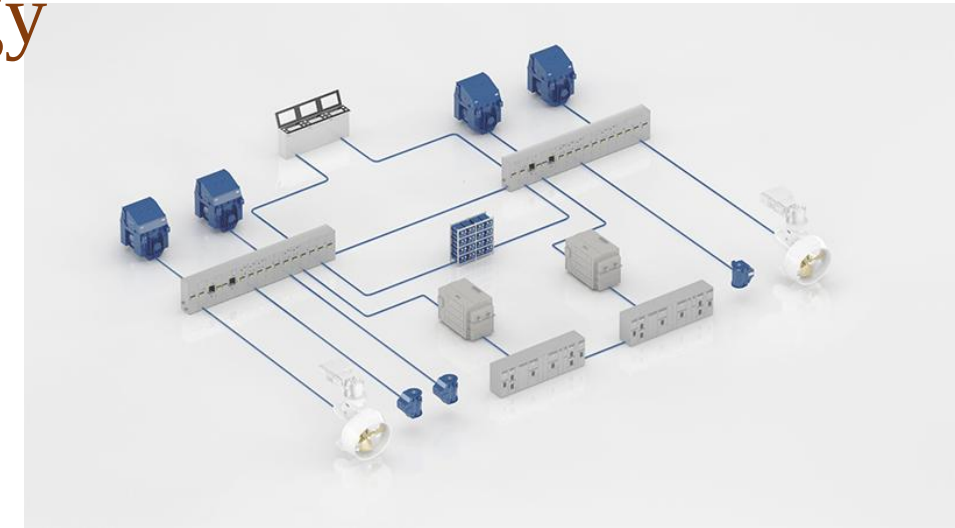

- Considerable reduction of fuel consumption
- Less maintenance of generator sets
- Improved dynamic response and maneuverability
- Ready for new energy sources
- Increased space for payload

State-of-the-art in Shipboard Microgrid

Renewable energy-baded Microgrids

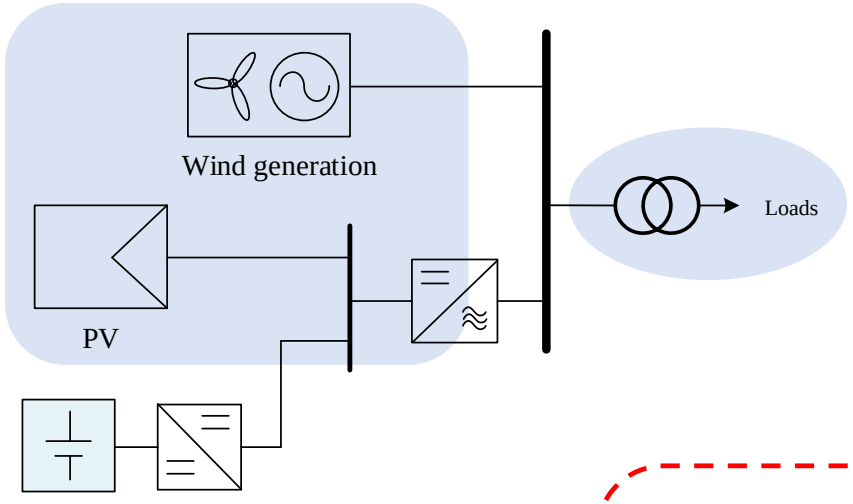

- Intermittent Renewable energy
- Regular Loads

Shipboard Microgrids

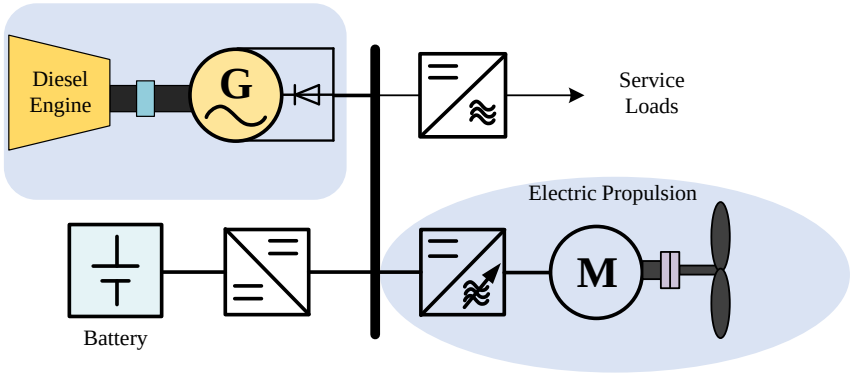

- Continuous Economic Generation
- Dynamic Loads

Common

- Use Of Power Electronic Converters
- Islanded Operation

Outline

- State-of-the-art in Shipboard Microgrid
- Bow Thruster in Shipboard Microgrid
- Coordination control of a Hybrid Electric Ferry

Bow Thruster in Shipboard Microgrid

Battery storage supply for the driver of the bow thruster

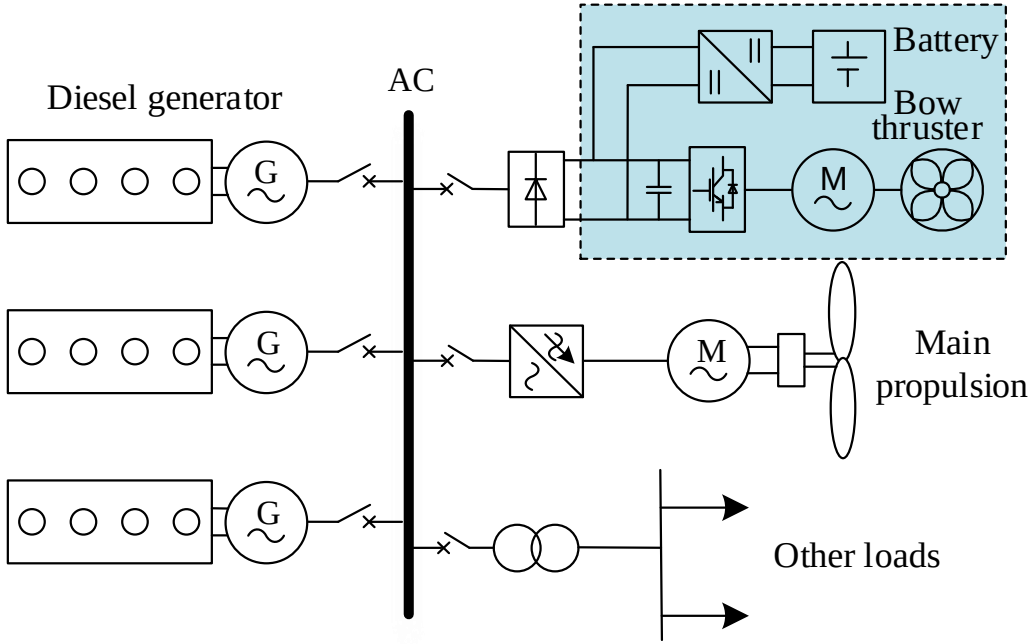

- Reduce the capacity of diesel generators
- Improve fuel efficiency
- Regenerative braking

Bow Thruster in Shipboard Microgrid

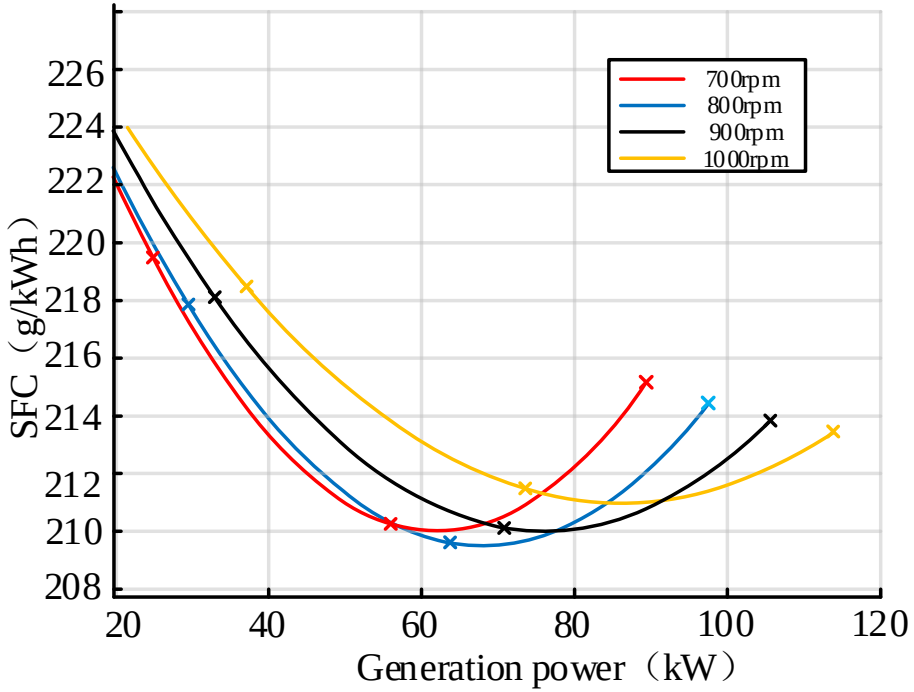

Fig. Relationship between specific fuel consumption, generation power and speed of diesel engine.

Battery **discharges** when power demand is greater than the diesel engine output

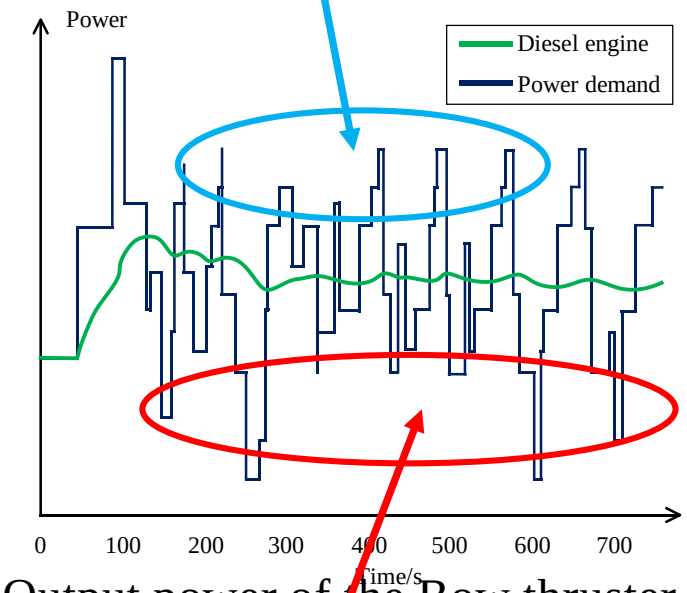

Output power of the Bow thruster

Battery **charges** when power demand is less than the diesel engine output

Bow Thruster in Shipboard Microgrid

An adaptive PI controller for the voltage loop

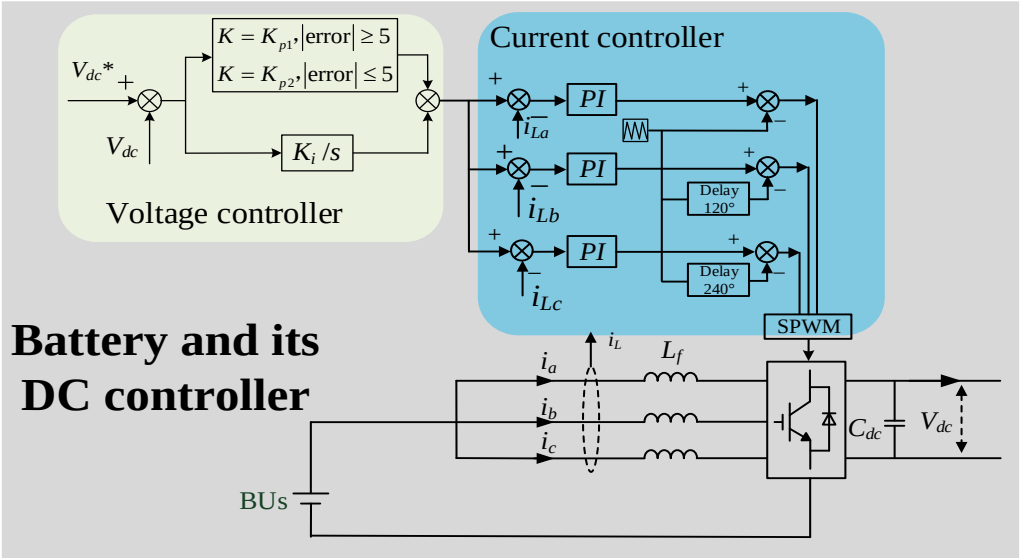

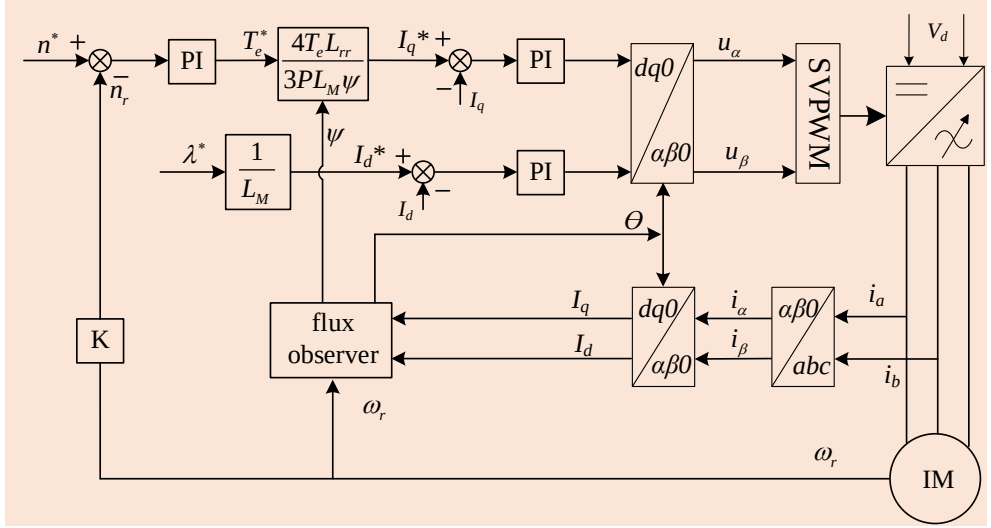

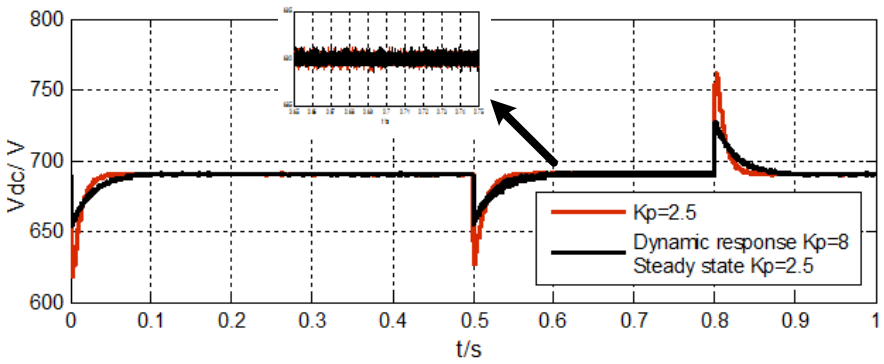

Voltage error >5V, K_{pu}=8;
Voltage error≤5V K_{pu} =2.5

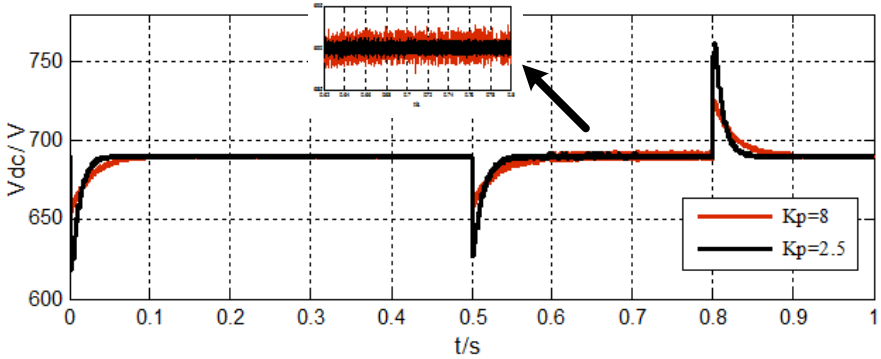

K_{pu} =8

Bow Thruster in Shipboard Microgrid

Simulation of the bow thruster with a battery

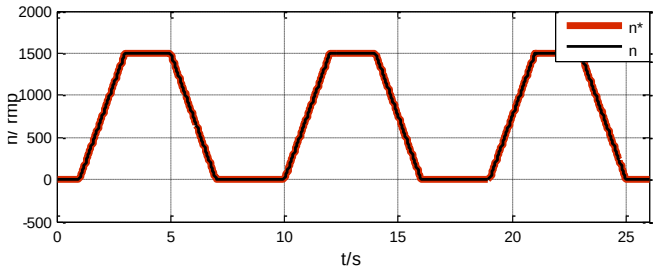

(a)The speed reference and real speed of bow thruster motor

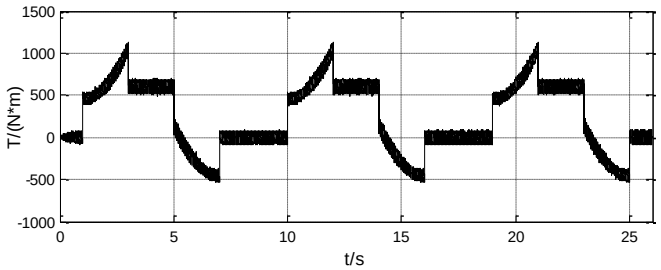

(b)Electromagnetic torque

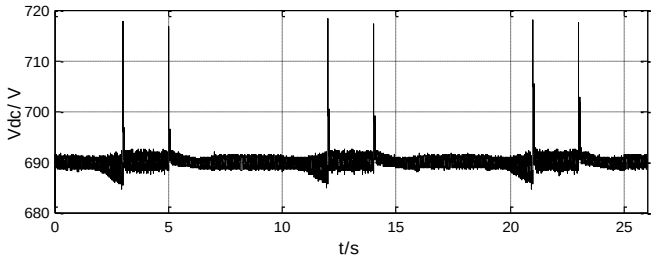

(c)DC bus voltage

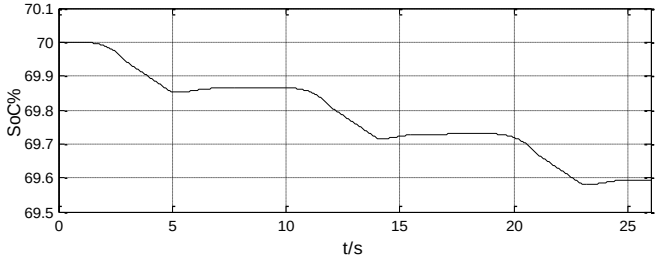

(d)Battery SoC

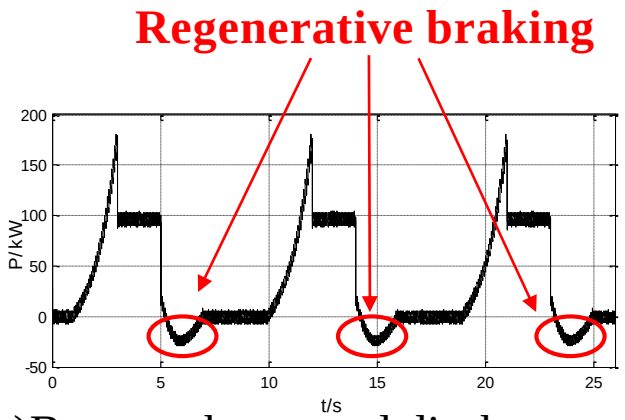

(e)Battery charge and discharge power

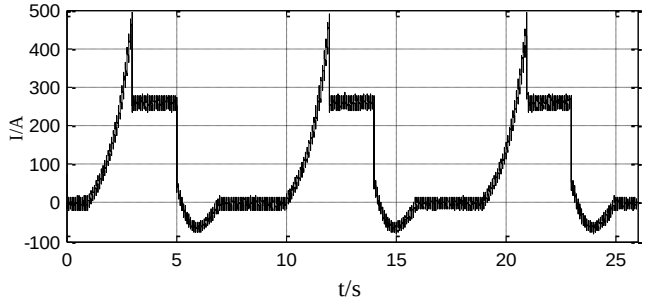

(f)Battery current

Outline

- State-of-the-art in Shipboard Microgrid
- Bow Thruster in Ship Microgrid
- Coordination control of a Hybrid Electric Ferry

a Hybrid Electric Ferry

Asia's first hybrid electric ferry

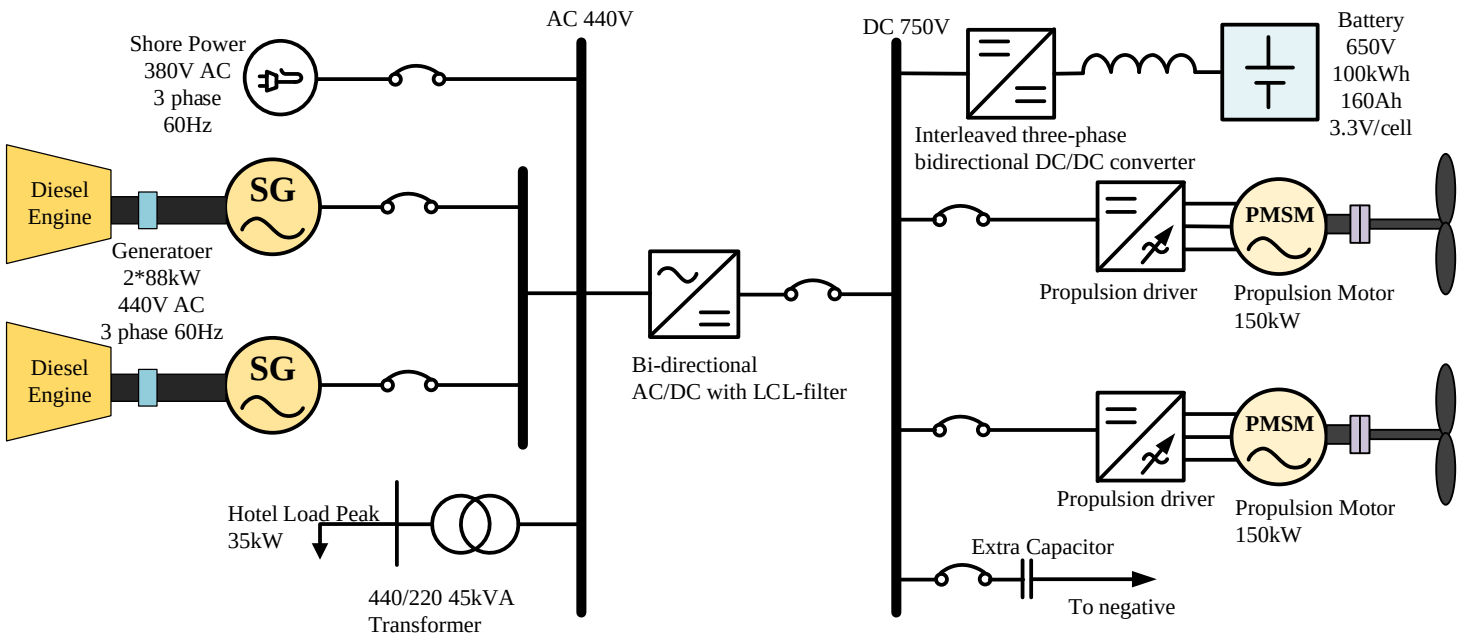

- Mode Ⅰ : Pure electric mode (PE)
- Mode Ⅱ: The battery and diesel-generator supple mode (BU&DGs)

A Hybrid Electric Ferry

Mode Ⅰ : Pure electric mode (PE)

- DC distribution power system
- The DGs are disconnected
- The BUs supplies the propulsion motors and the hotel loads

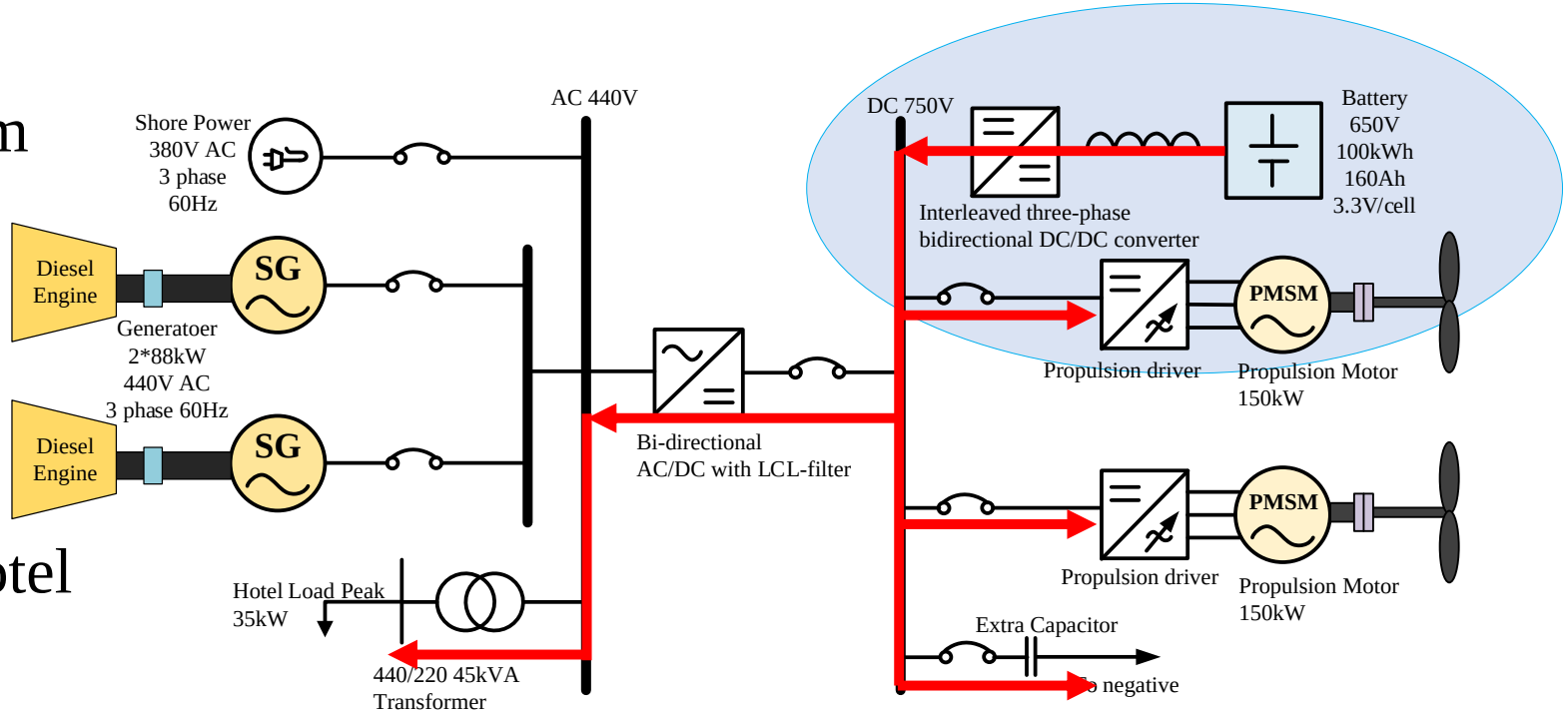

A Hybrid Electric Ferry

The interleaved three-phase bidirectional DC/DC converter with its controller

- the large supply power
- small current ripple

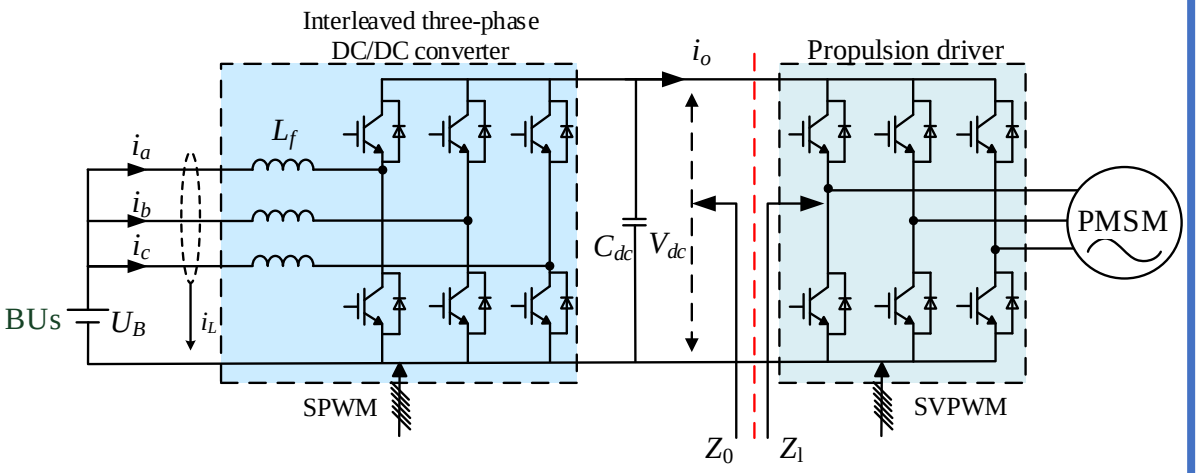

Anti-windup PI

To reduce the capacity of the DC-bus capacitor and escape the saturation of the duty cycle when the propulsion motors start

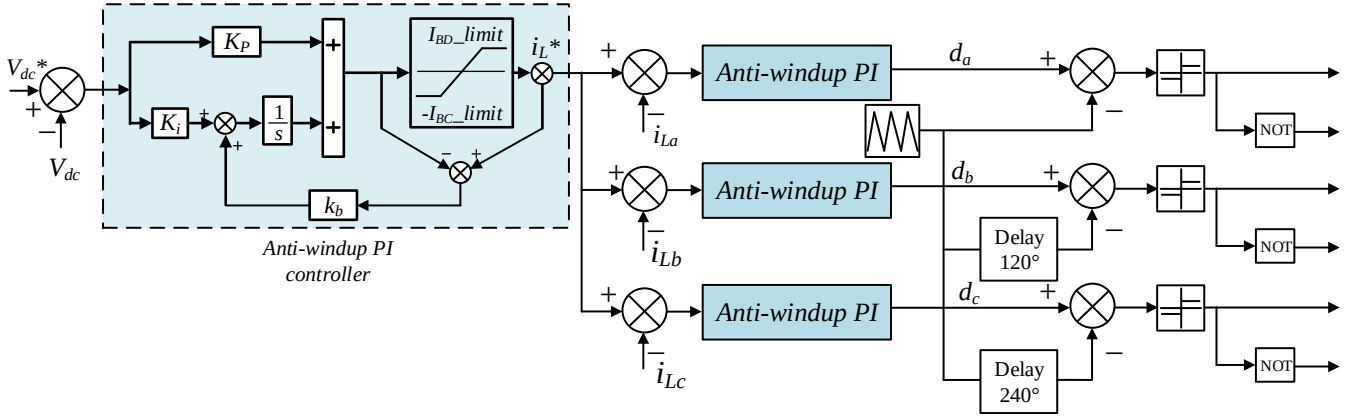

A Hybrid Electric Ferry

Choice of DC/DC Converter Controller Parameters

Consider the following

- Improve the dynamic response characteristics and ripple of the DC bus voltage
- Choose a smaller DC bus capacitor
- The propulsion motors with its power electronic driver can be considered as a constant power load from the source terminal. Constant power load has the characteristic of negative increment impedance and may reduce the system dump and cause the system unstable.

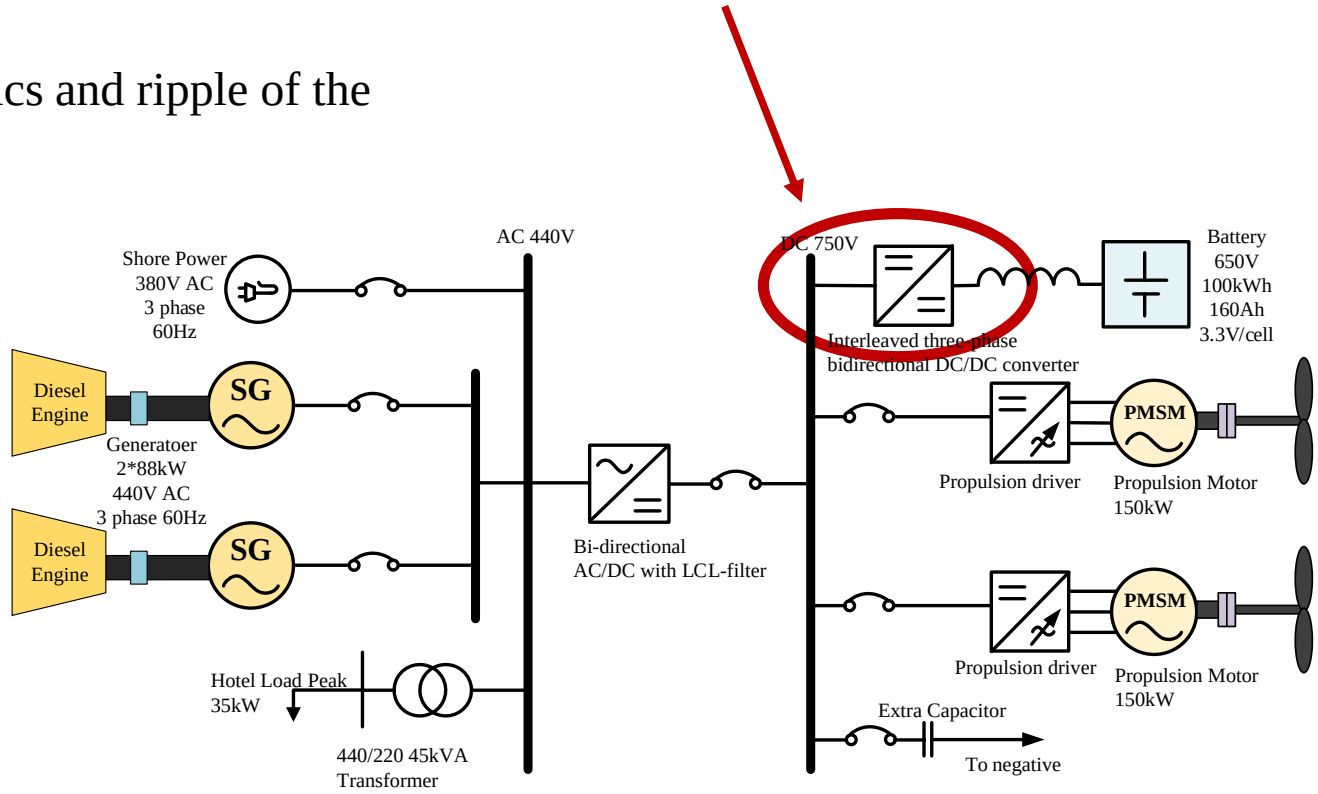

A Hybrid Electric Ferry

Mathematical block of the DC/DC converter

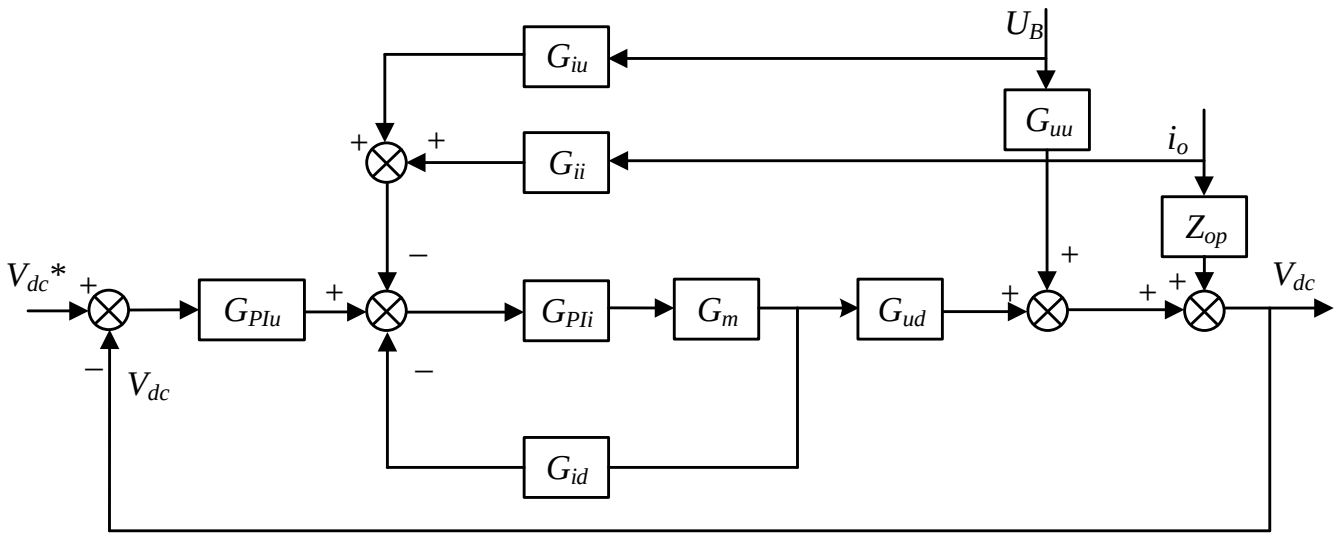

G_{ud}	V_{dc}/d	G_{ii}	i_l/i_o
G_{id}	i_l/d	G_{iu}	i_l/U_b
Z_{op}	V_{dc}/i_o	G_{uu}	V_{dc}/V_b
G_{PIu}	voltage *PI* controller	G_{PIi}	the inner loop current *PI* controller

- $G_u = \frac{V_{dc}}{V_{ref}} = \frac{G_{ud}G_{PIi}G_{PIu}}{1+G_{id}G_{PIi}+G_{ud}G_{PIi}G_{PIu}}$
- $Z_o = \frac{V_{dc}}{i_o} = \frac{Z_{op}-G_{ii}\cdot G_{icc}\cdot G_{ud}}{1+G_{piu}\cdot G_{icc}\cdot G_{ud}}$
- $Z_L(s)=-U_{dc}^2/P_e\,.(s+\omega)/\omega$
- $N(s)=Z_o(s)/Z_l(s)$

a Hybrid Electric Ferry

Nyquist curve of N(s) AND Bode plots of G_o

K_p Changes

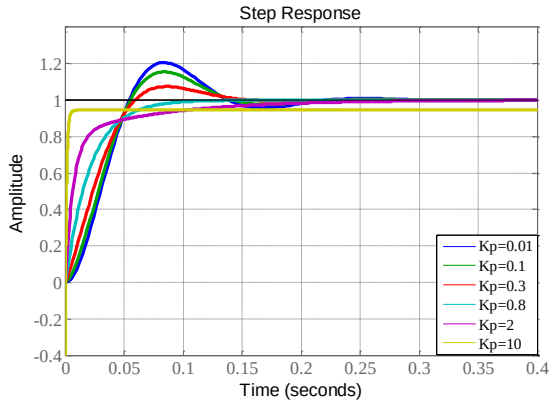

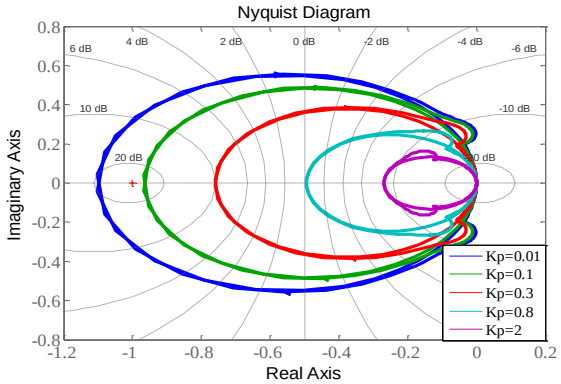

K_i Changes

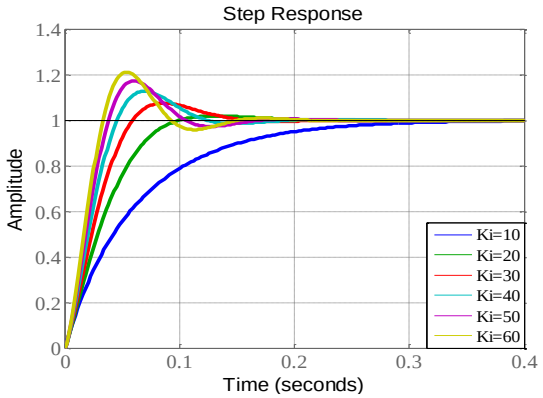

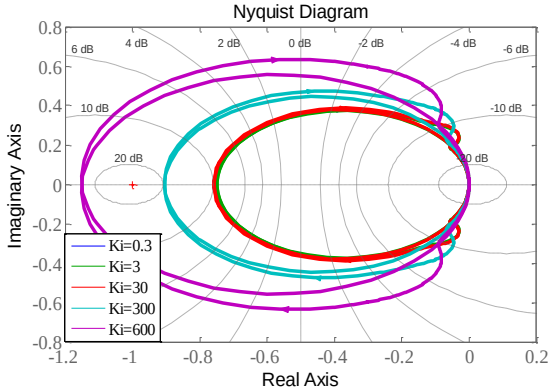

C_{dc} Changes

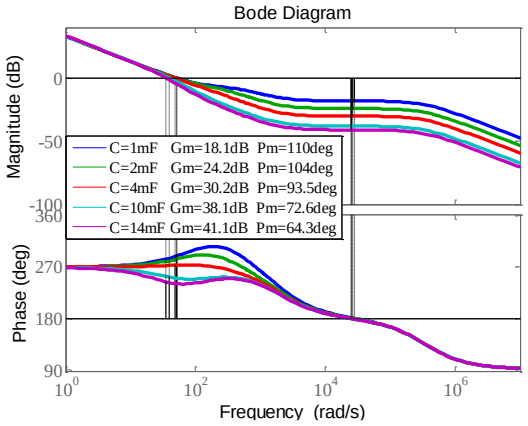

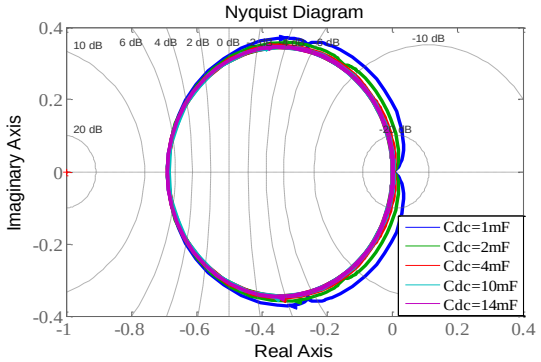

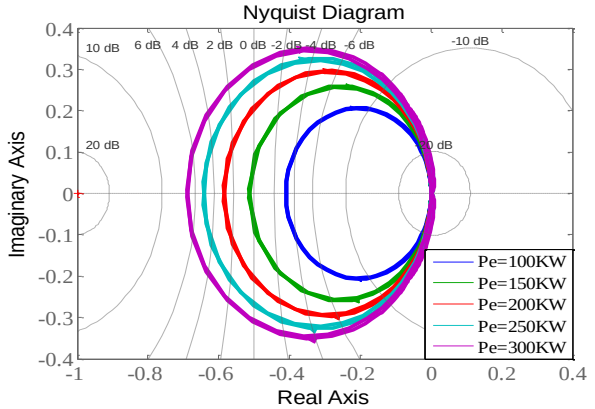

P_e changes and K_p=0.3, K_i=30, C_{dc}=4mF

A Hybrid Electric Ferry

Mode2 : The battery and diesel-generator supple mode

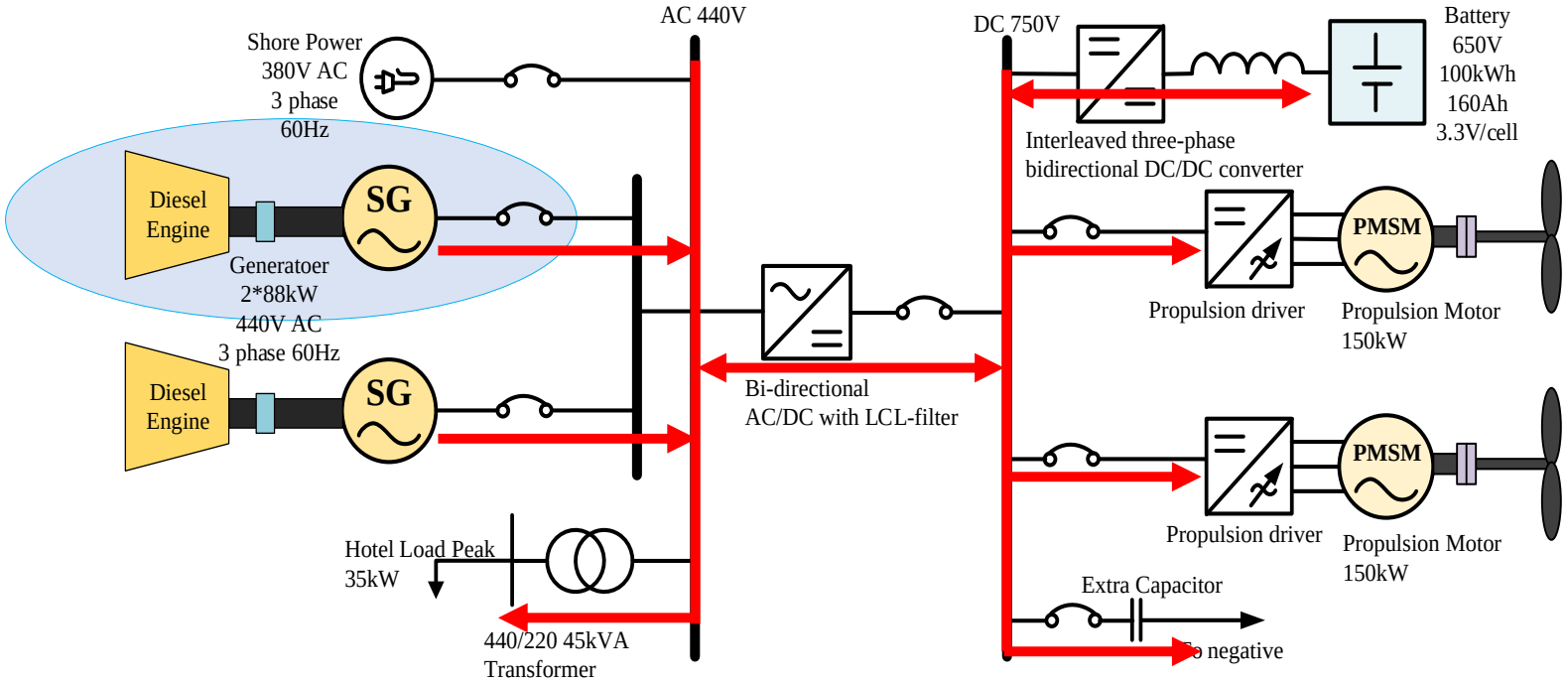

A Hybrid Electric Ferry

Bidirectional DC/AC converter

- The system frequency 60Hz
- Share the reactive power
- The power factor of the diesel generators equal to 1

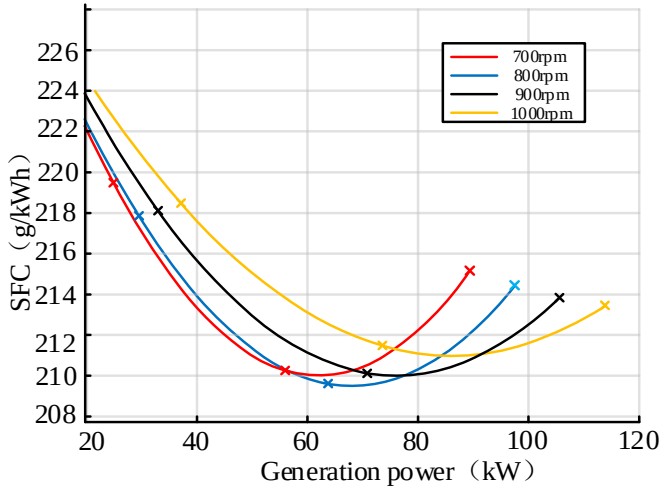

Fig. Relationship between fuel consumption, generation power and speed of diesel engine.

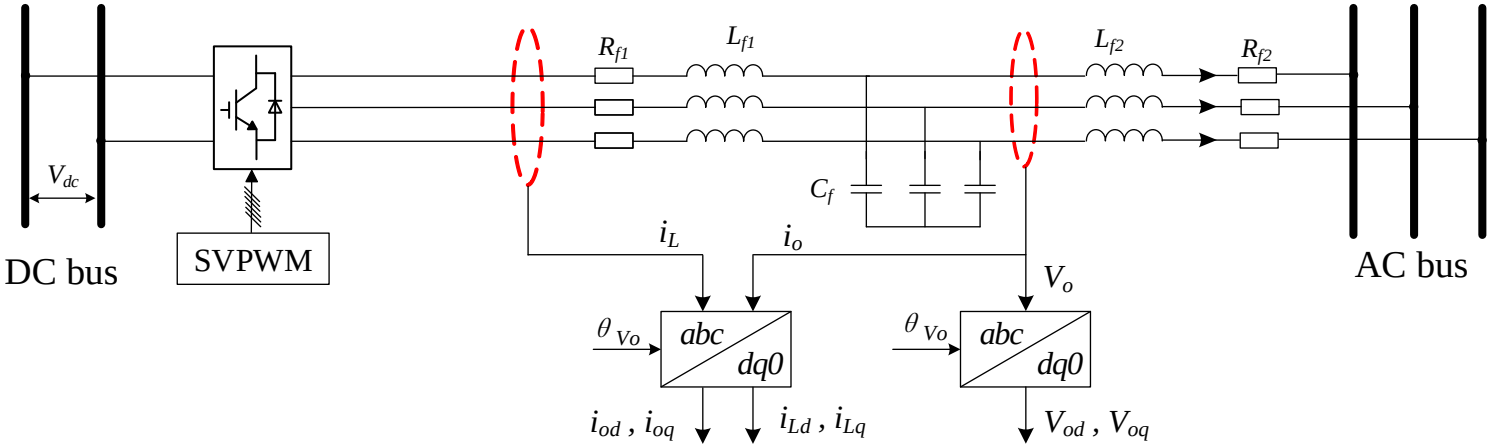

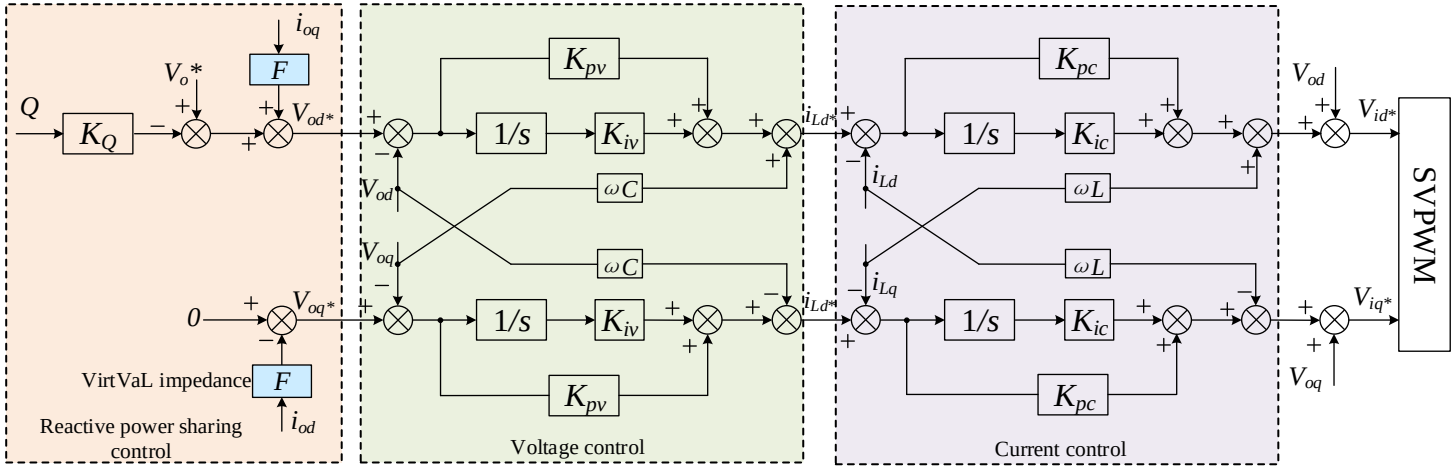

A Hybrid Electric Ferry

Diesel generator's speed regulator and exciter

- The optimal operation point of the diesel engine
  - → 0.8 times rated power
- P-f droop control
  - → AC bus frequency equal to 60Hz
- Q-V droop control
  - → the load reactive power sharing

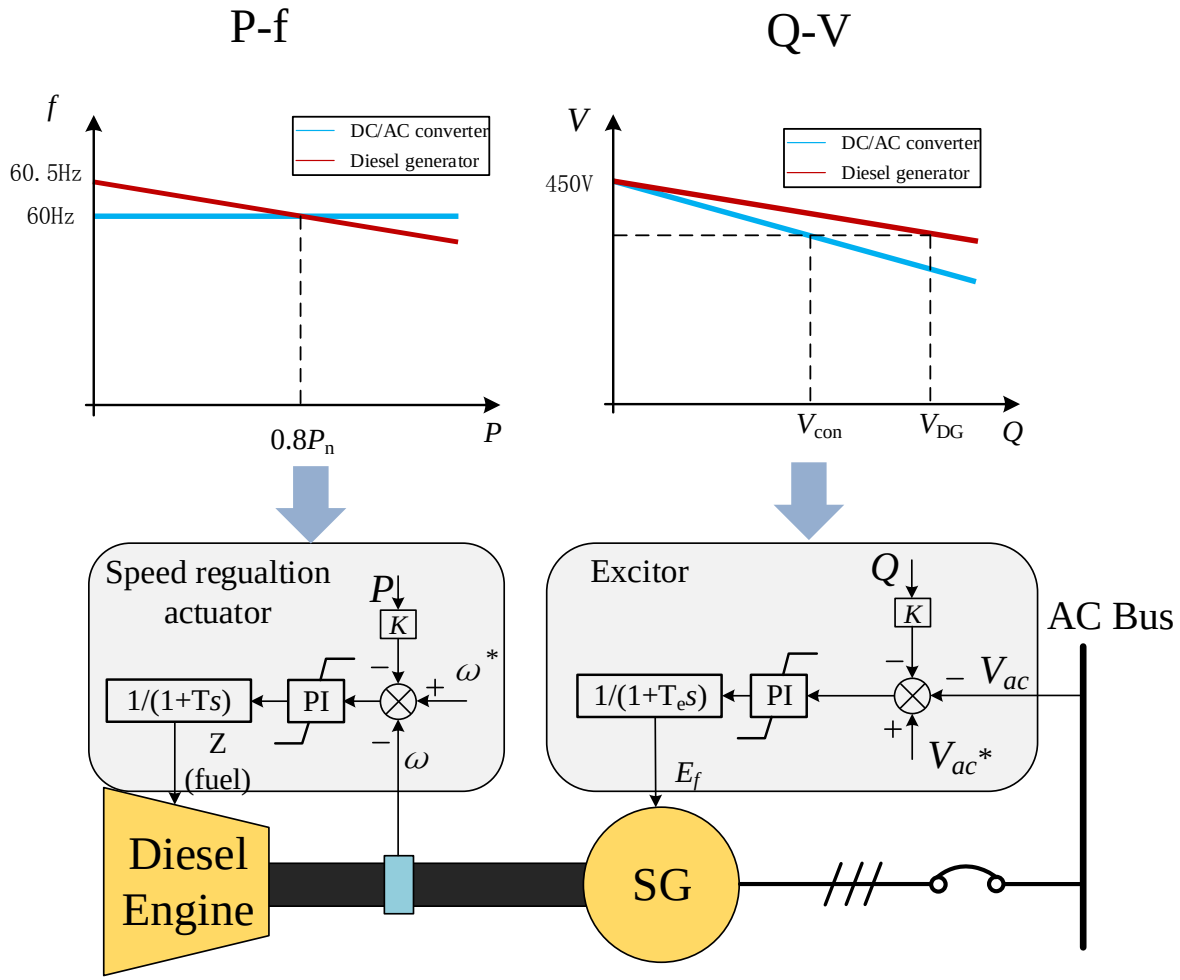

A Hybrid Electric Ferry

Simulation of different operation modes of hybrid electric ferry

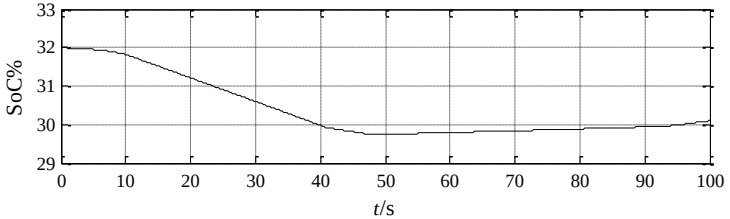

(a)BU SoC.

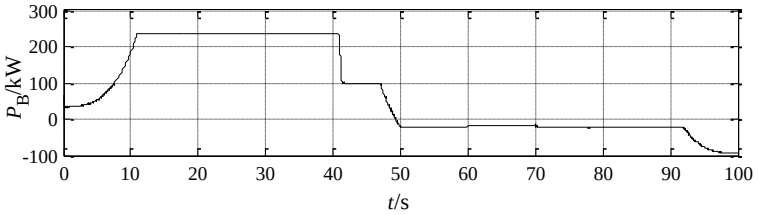

(b)BU active power

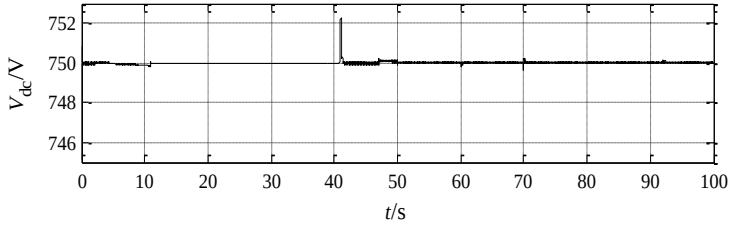

(c)DC bus voltage

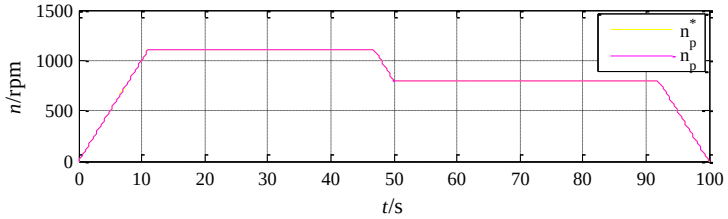

(d)The propulsion motor speed

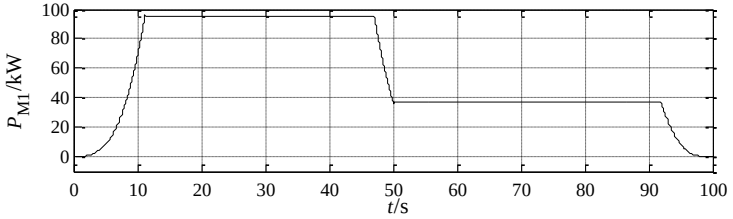

(e)The active power of PMSM1 and PMSM1

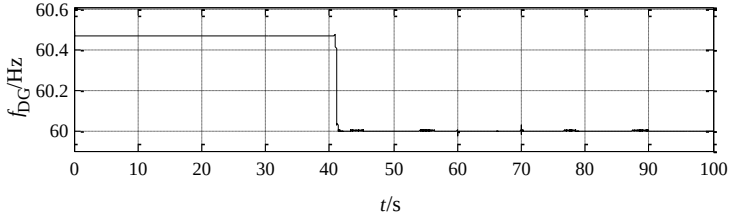

(f)The frequency of diesel generator

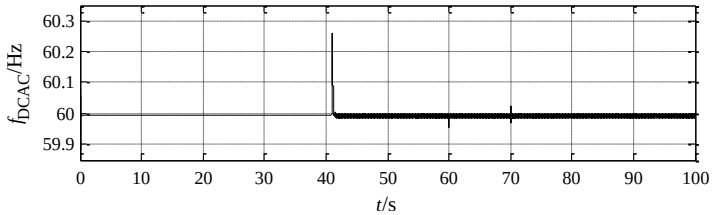

(g)System frequency

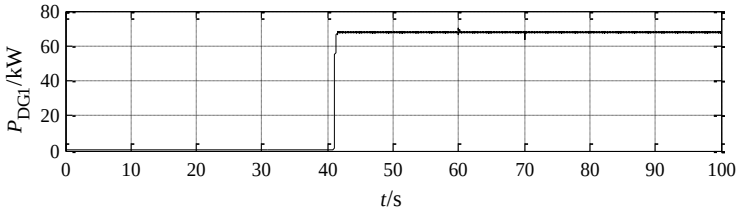

(h)The active power of DG1 and DG2.

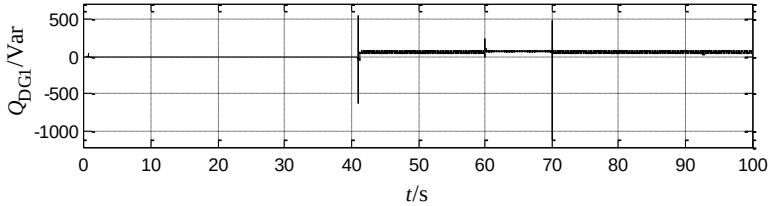

(i)The reactive power of DG1 and DG2.

Thanks for your attention!

Email: xiaozhaoxia@tjpu.edu.cn