DC Microgrids and Distribution Systems for Residences

Toshifumi ISE,
Hiroaki KAKIGANO
（Osaka University, JAPAN）

Outline of the Presentation

1. Introduction
2. System Configuration and Control Scheme
3. System Configuration for Loss Calculation
4. Data for Loss Calculation
5. Results of Loss Calculation
6. Conclusions

1. Introduction

Low Voltage Bipolar Type DC Microgrid

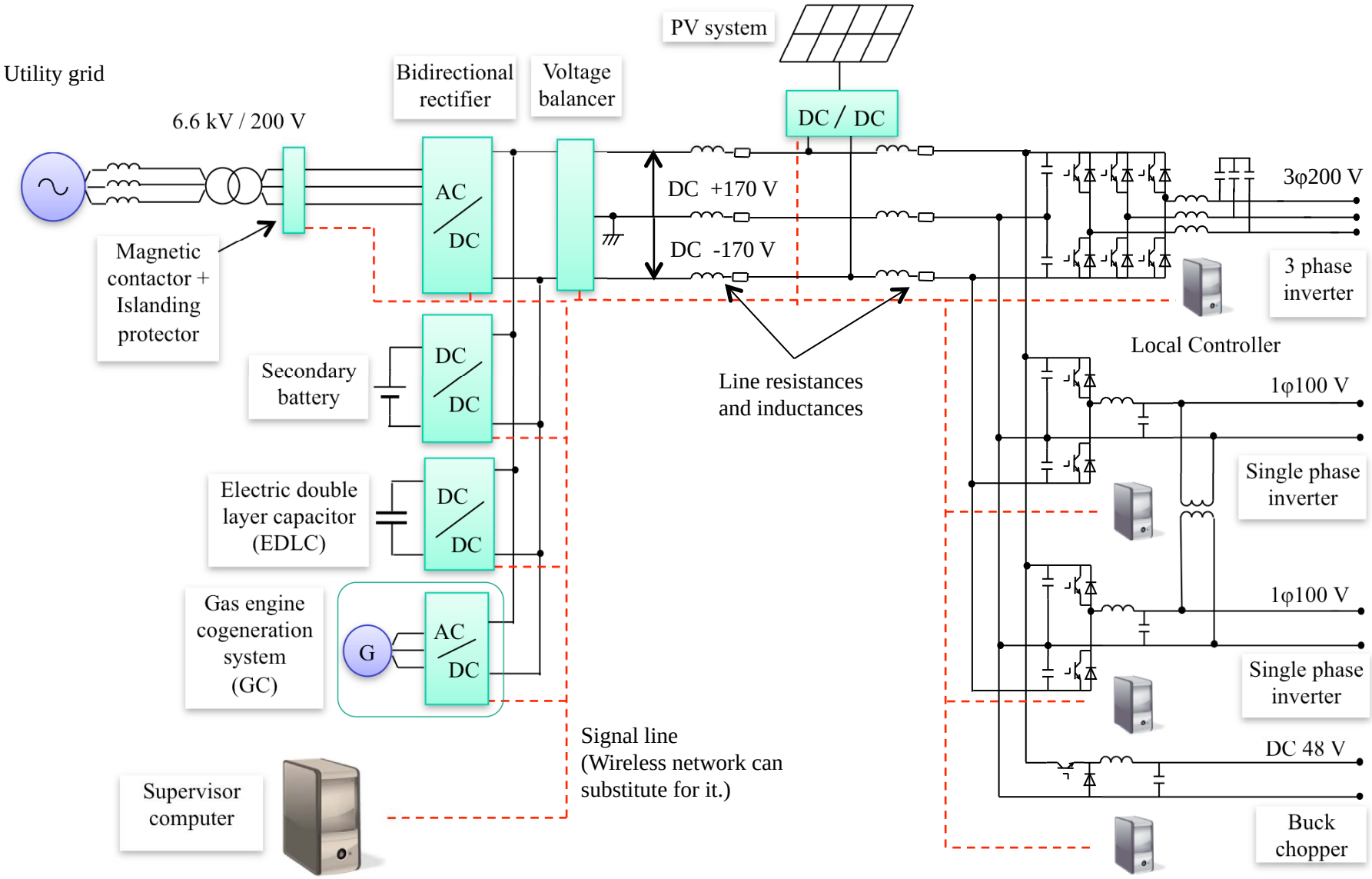

Features of Proposed DC Microgrid

1. The distribution of load side converters provides super high quality power supplying.
2. Various forms of electric power like single phase 100 V, three phase 200 V, DC 100 V can be obtained from the ±170 V DC line.
3. Rapid disconnection and reconnection with the utility grid are realized easily.
4. Electric power can be shared between load side converters.

2. System Configuration and Control Scheme

System Configuration

DC Microgrid for Residential Complex

All residences have their own distributed generations and share each other's electrical power.

Concept of the System

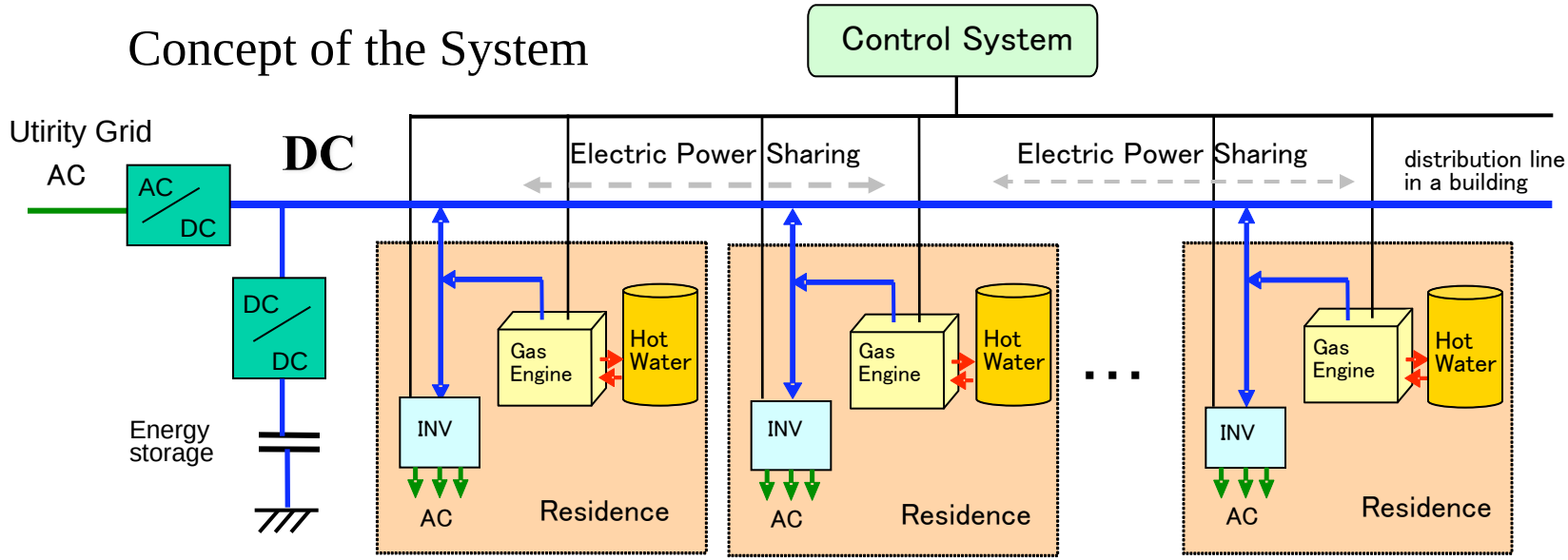

All cogenerations are controlled by on/off operation. Then, total power from the generations can be calculated by a number of operating generations.

Power Management Scheme : Interconnected Mode

Interconnected operation mode

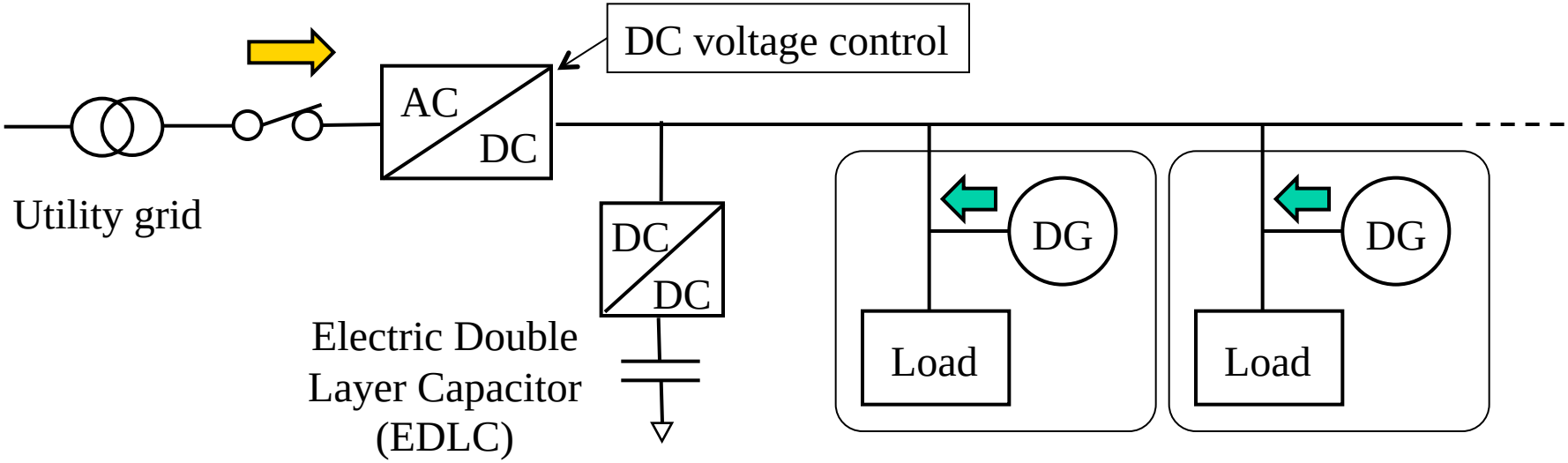

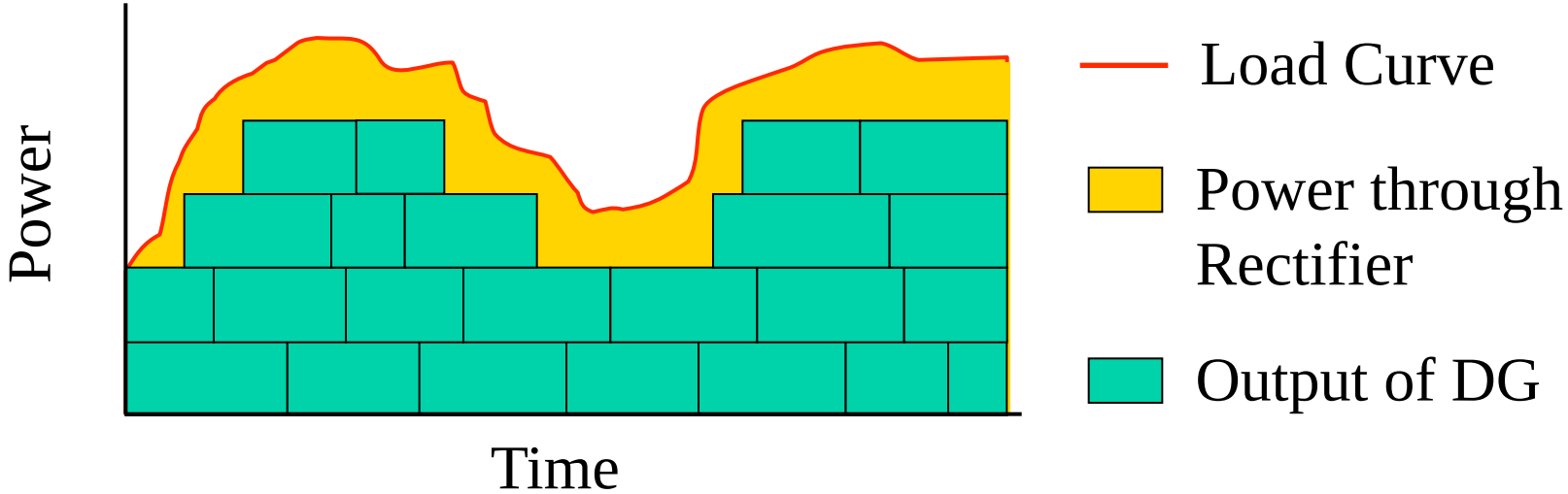

Power Management Scheme: Islanding Mode

Islanding operation mode

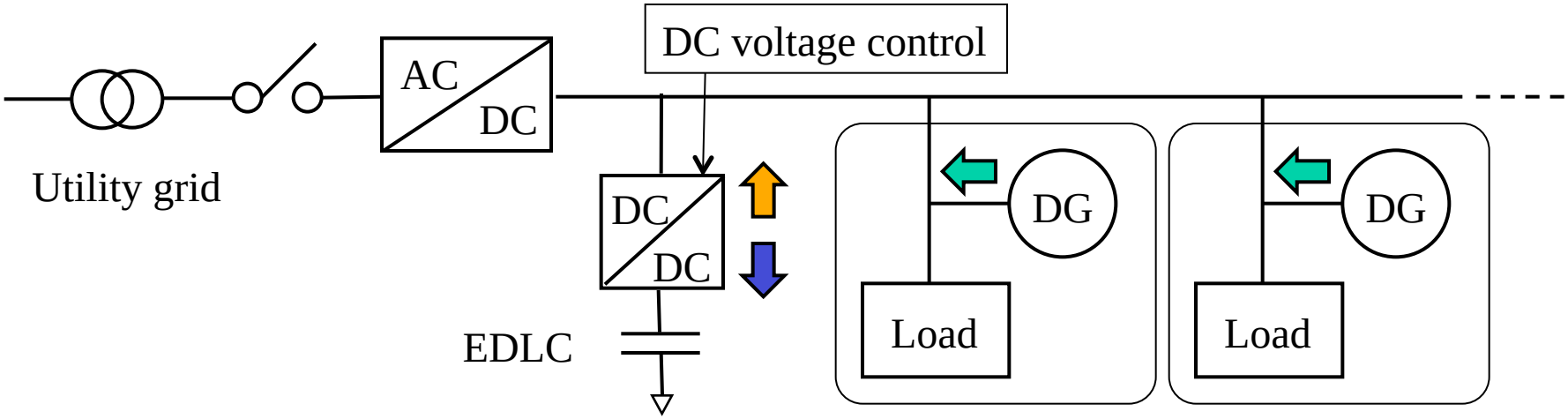

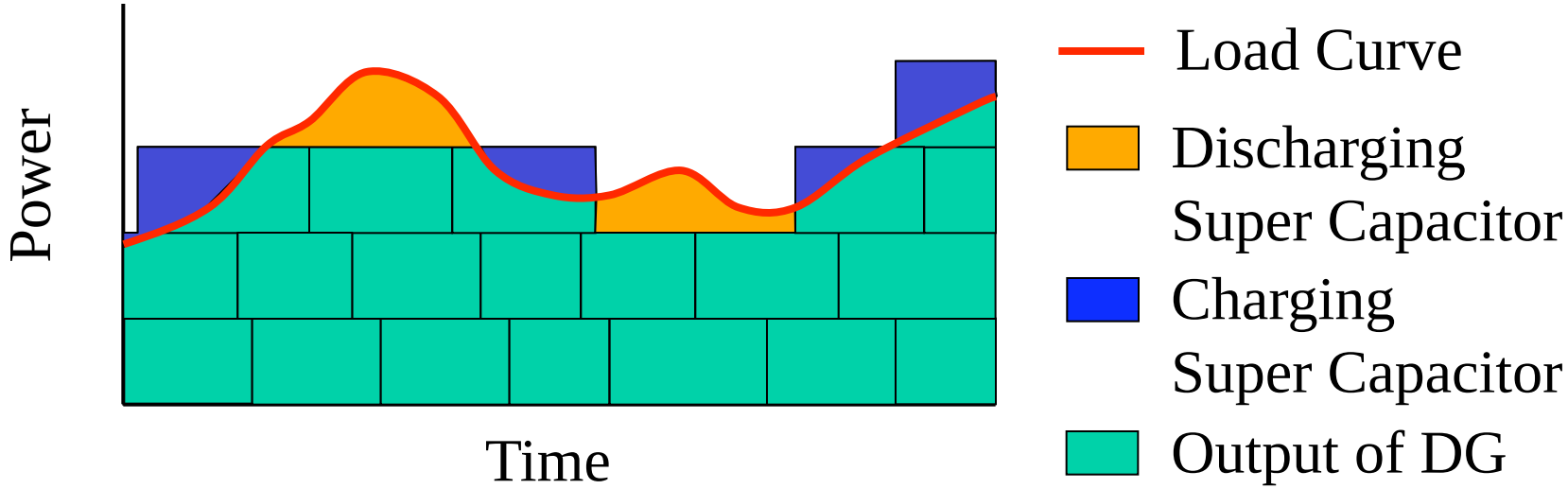

Configuration of Experimental System

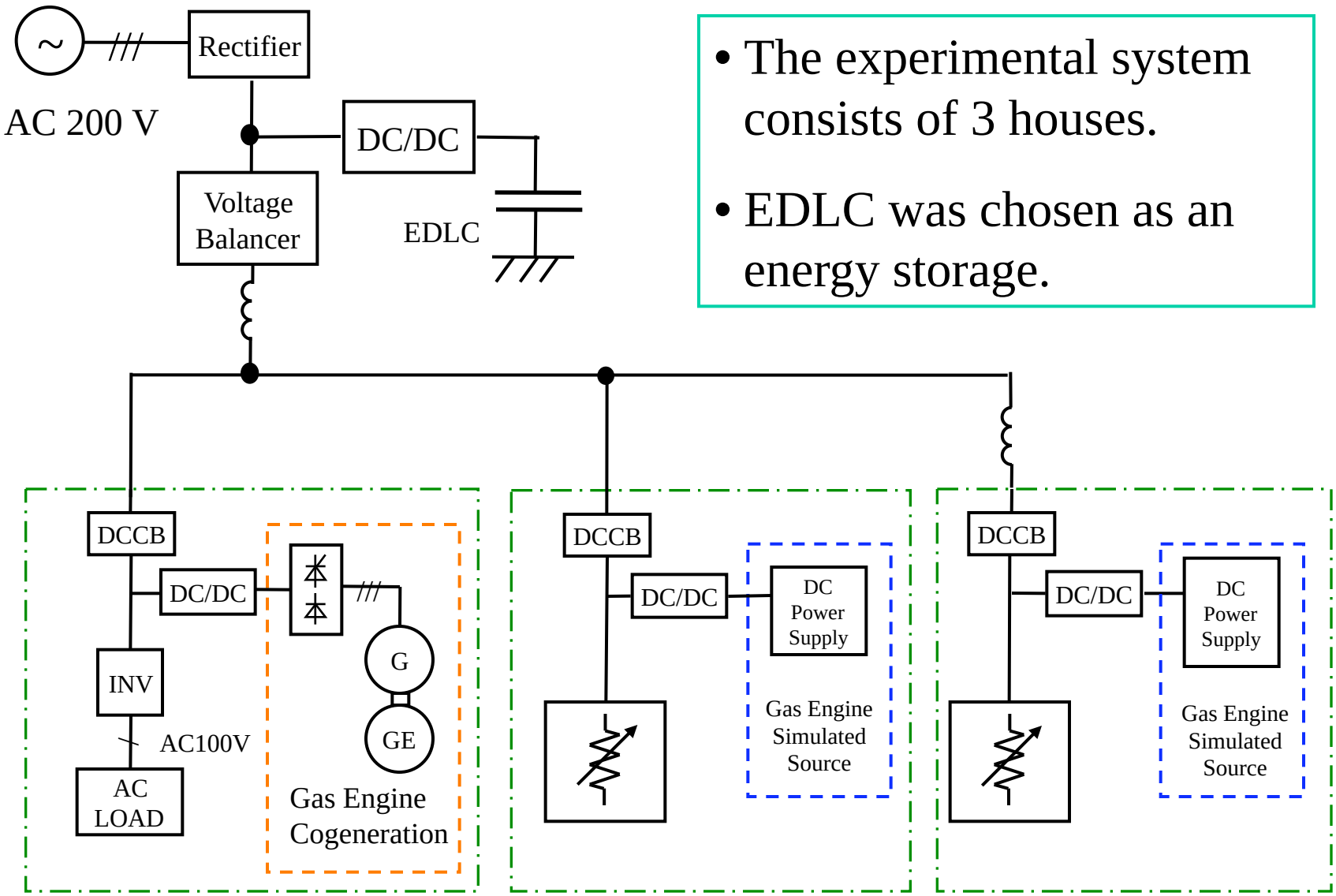

- The experimental system consists of 3 houses.
- EDLC was chosen as an energy storage.

Appearance of the System

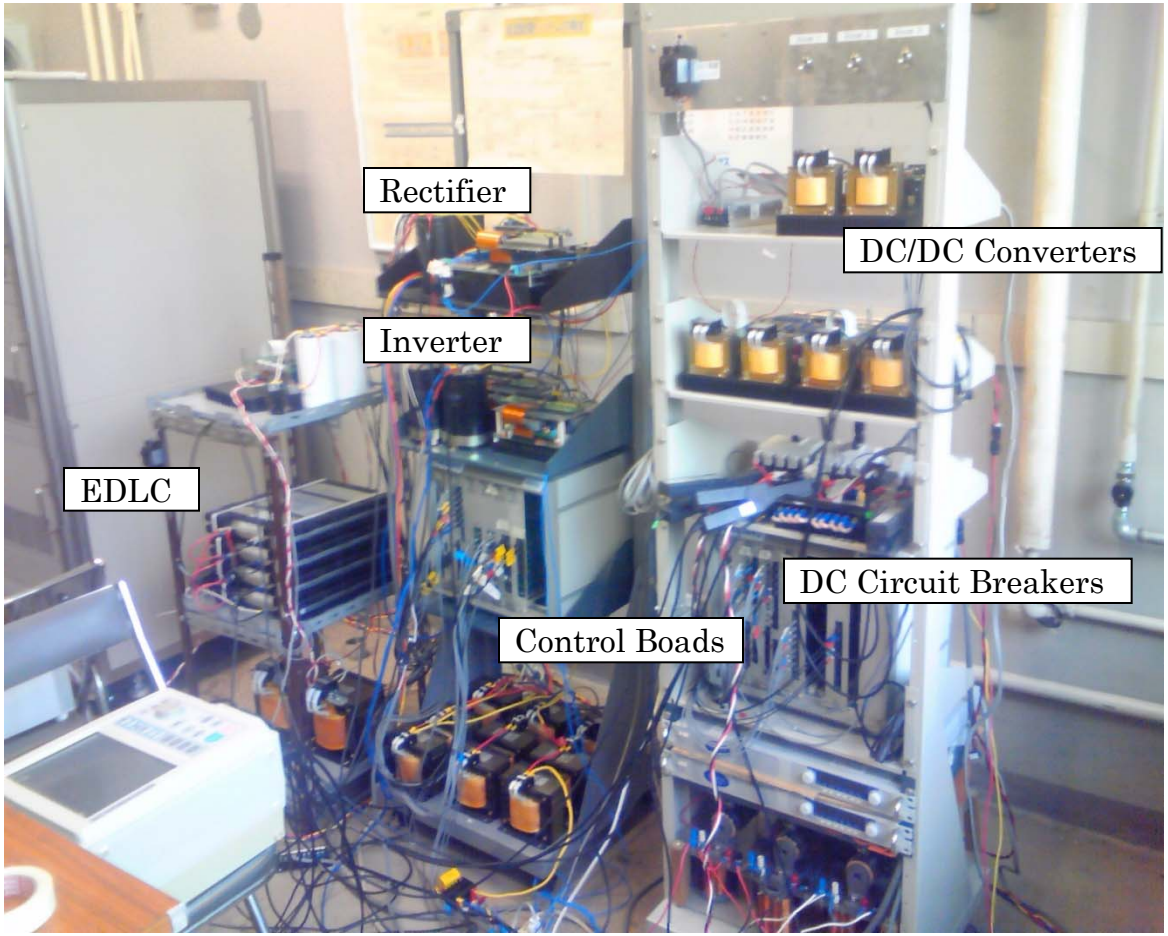

System setup

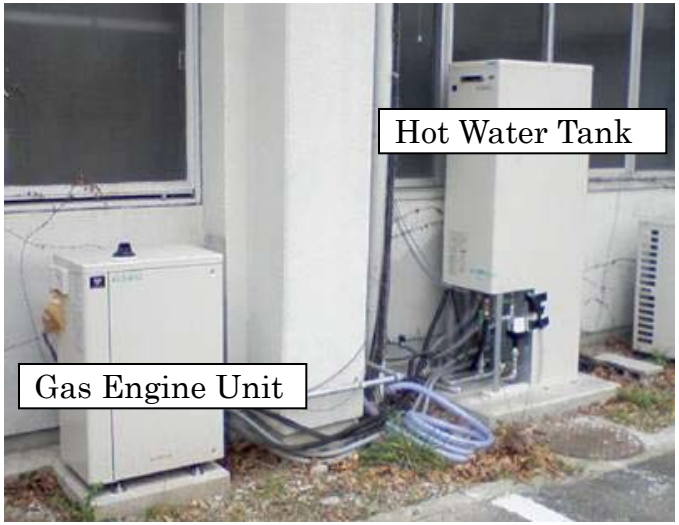

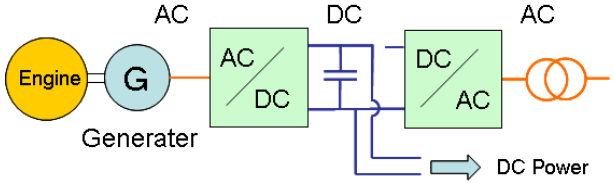

Gas engine cogeneration

(Rated Capacity 1 kW)

Experiments

System stable operation was confirmed by the experiments as follows:

- Fundamental system characteristics

（Load variation, Operation of DGs,

Voltage sag, Short Circuit at the load side）

- Power Supplying to real home appliances
- Control method of operating DGs' amount
- Disconnection from and reconnection with the utility grid

In this presentation

•Voltage clamping control is mentioned.
•The experimental results are shown.

Control of EDLC in Interconnected Mode

Interconnected mode

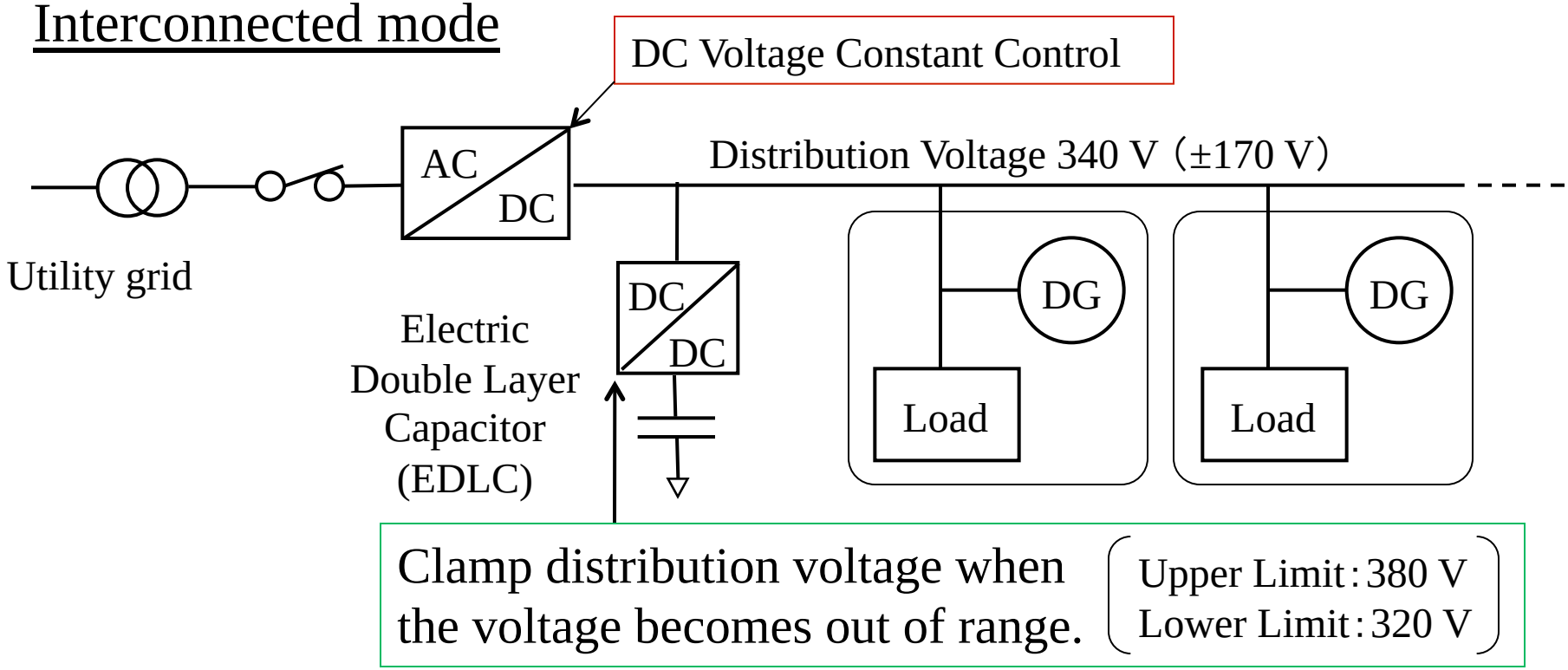

Effect of Voltage Clamp

1. Keep distribution voltage if the current of rectifier is limited.
2. Prevent over voltage of the devices connected to dc line
3. Help disconnection and reconnection process

Control Scheme of Disconnection

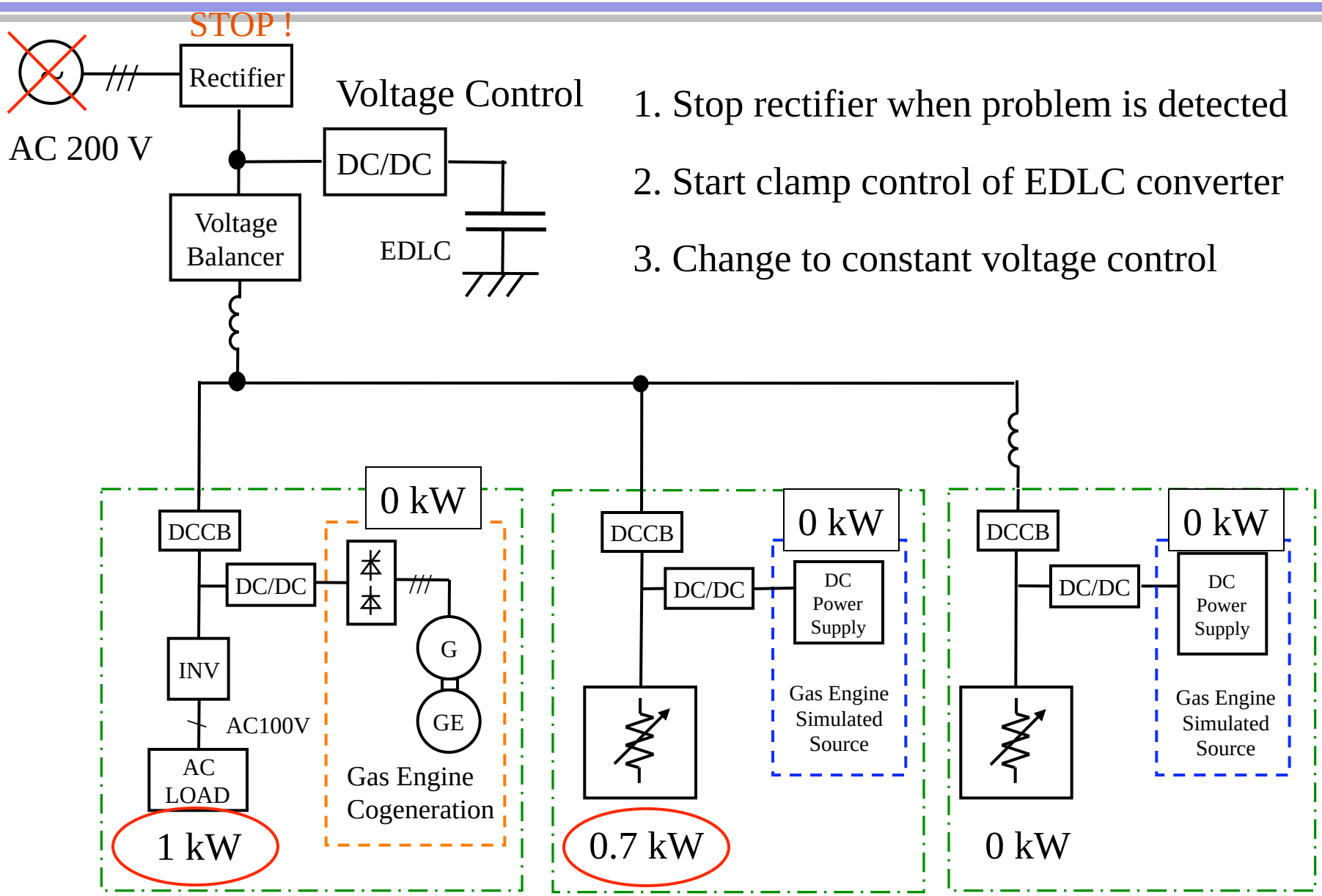

1. Stop rectifier when problem is detected
2. Start clamp control of EDLC converter
3. Change to constant voltage control

Experimental Results of Disconnection

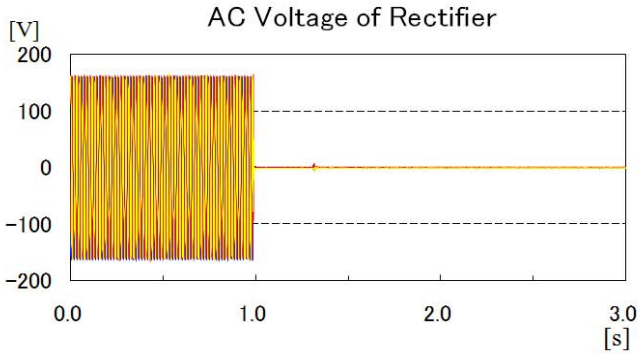

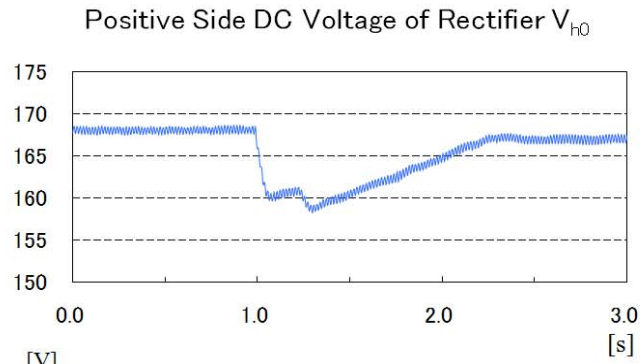

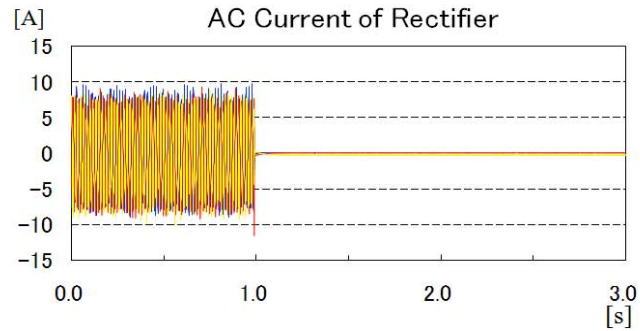

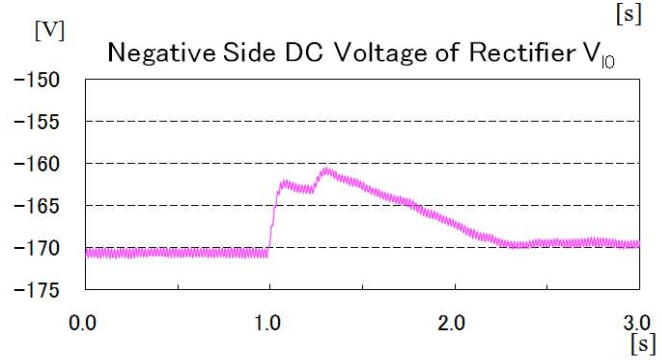

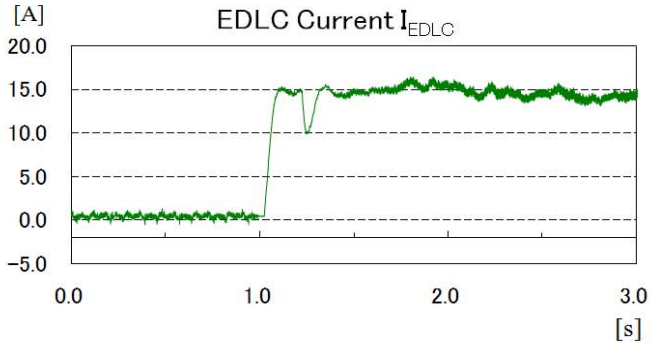

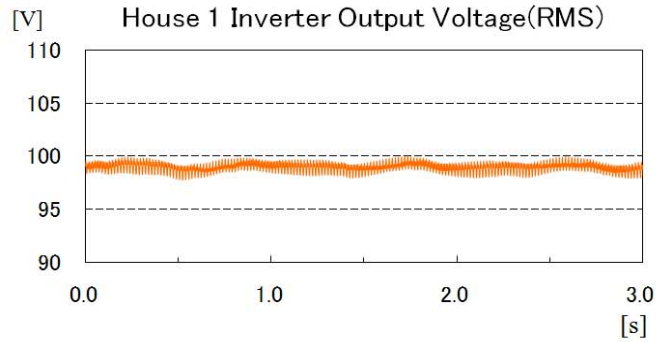

Seamless disconnection was verified when blackout occurred.

Control Scheme of Reconnection

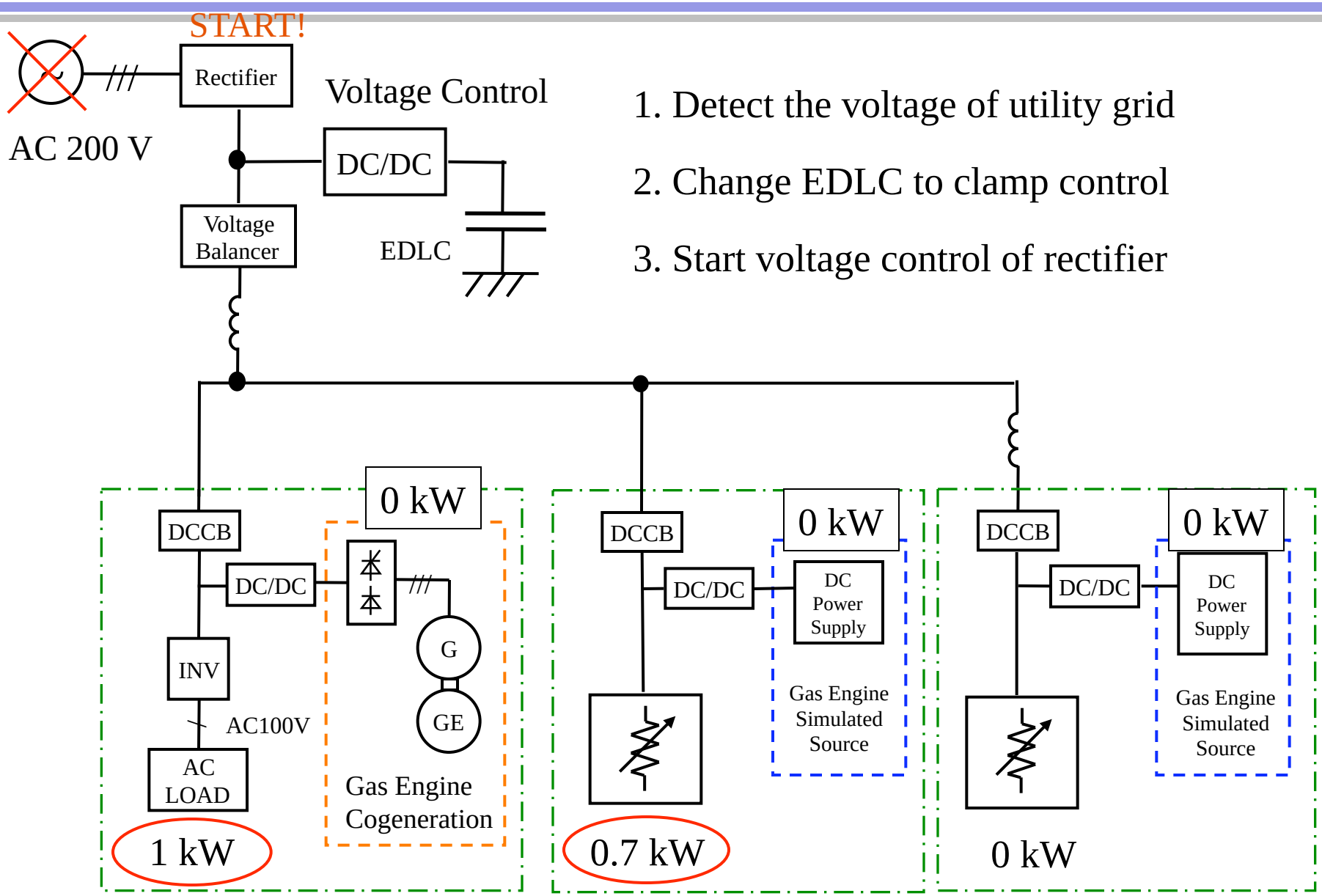

1. Detect the voltage of utility grid
2. Change EDLC to clamp control
3. Start voltage control of rectifier

Experimental Results of Reconnection

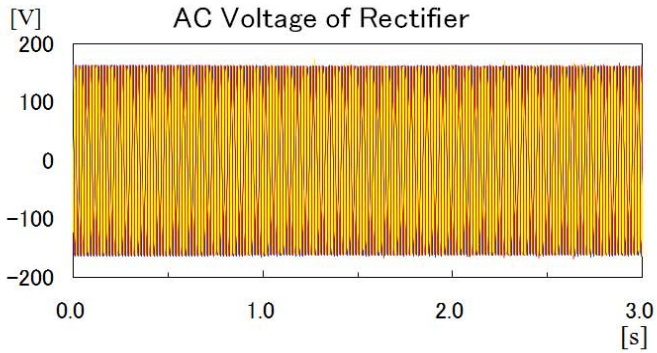

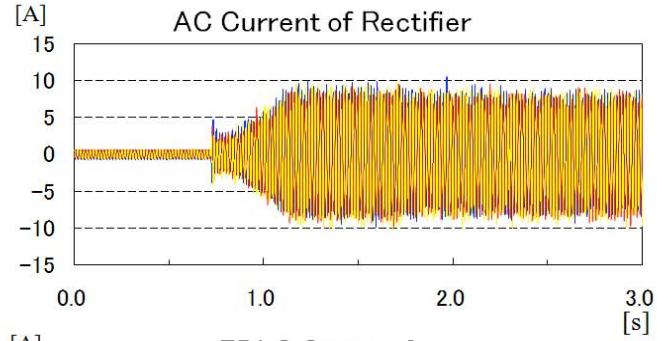

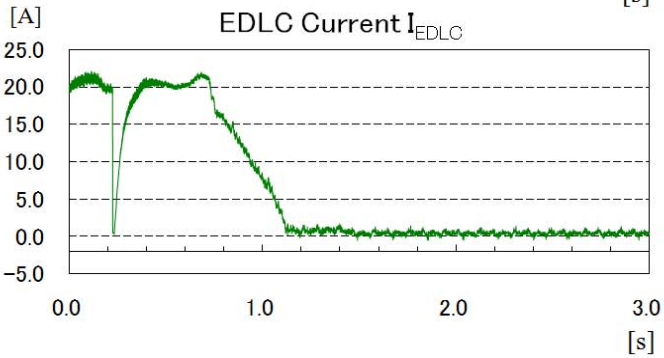

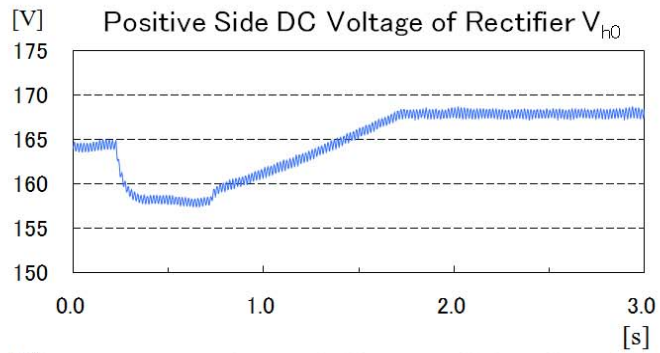

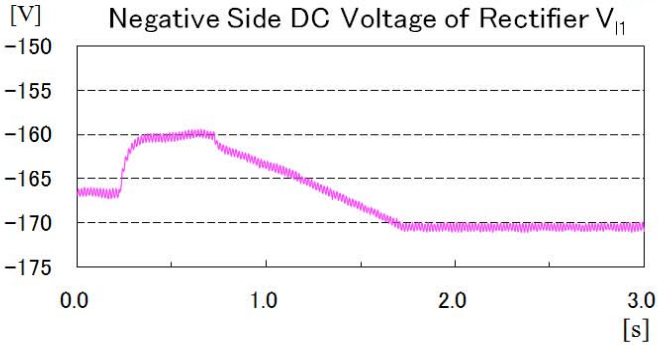

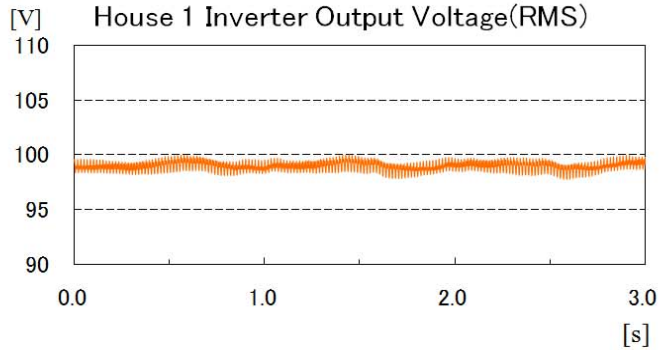

Smooth reconnection was verified when utility grid was recovered.

Experiment of Voltage Sag

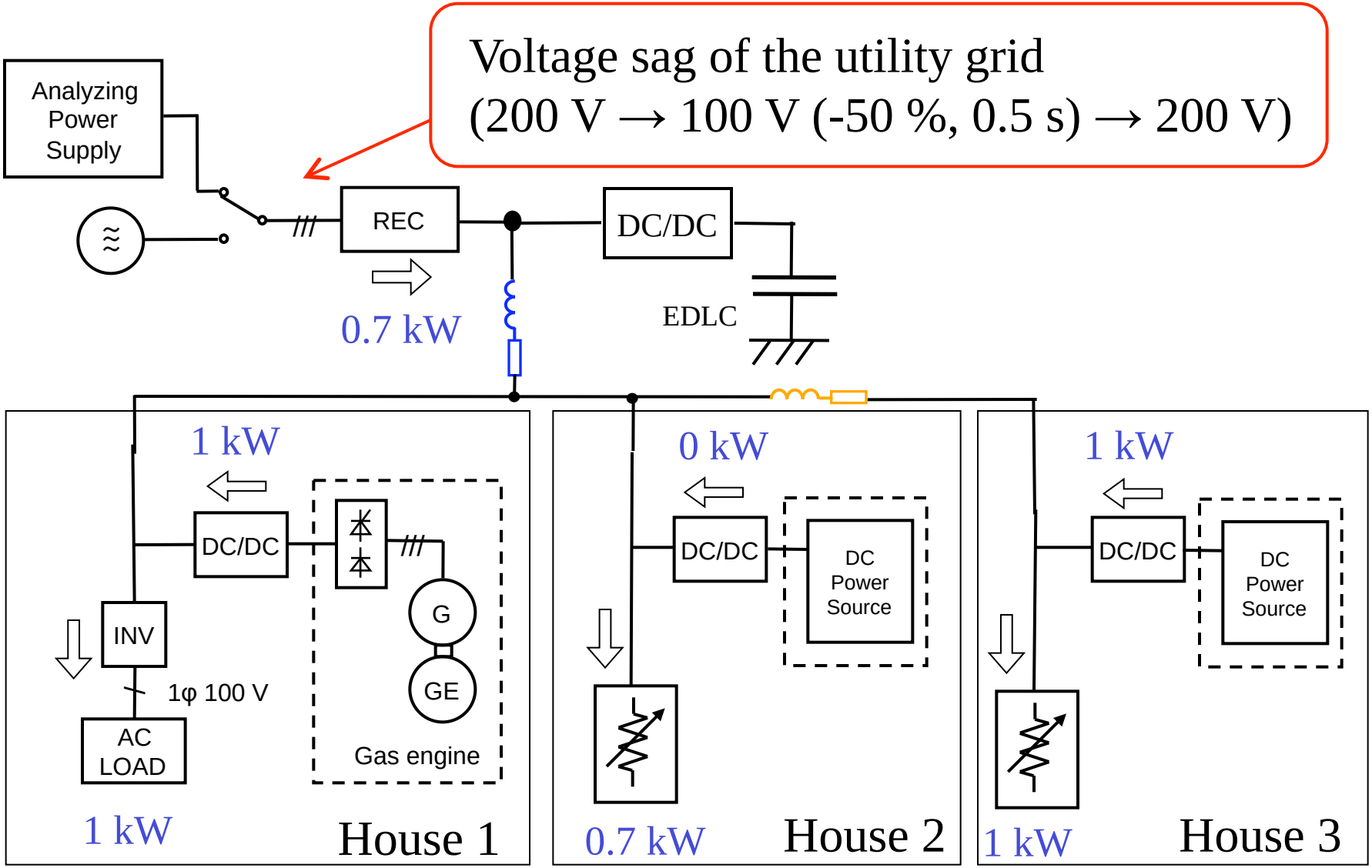

Experimental Results of Voltage Sag

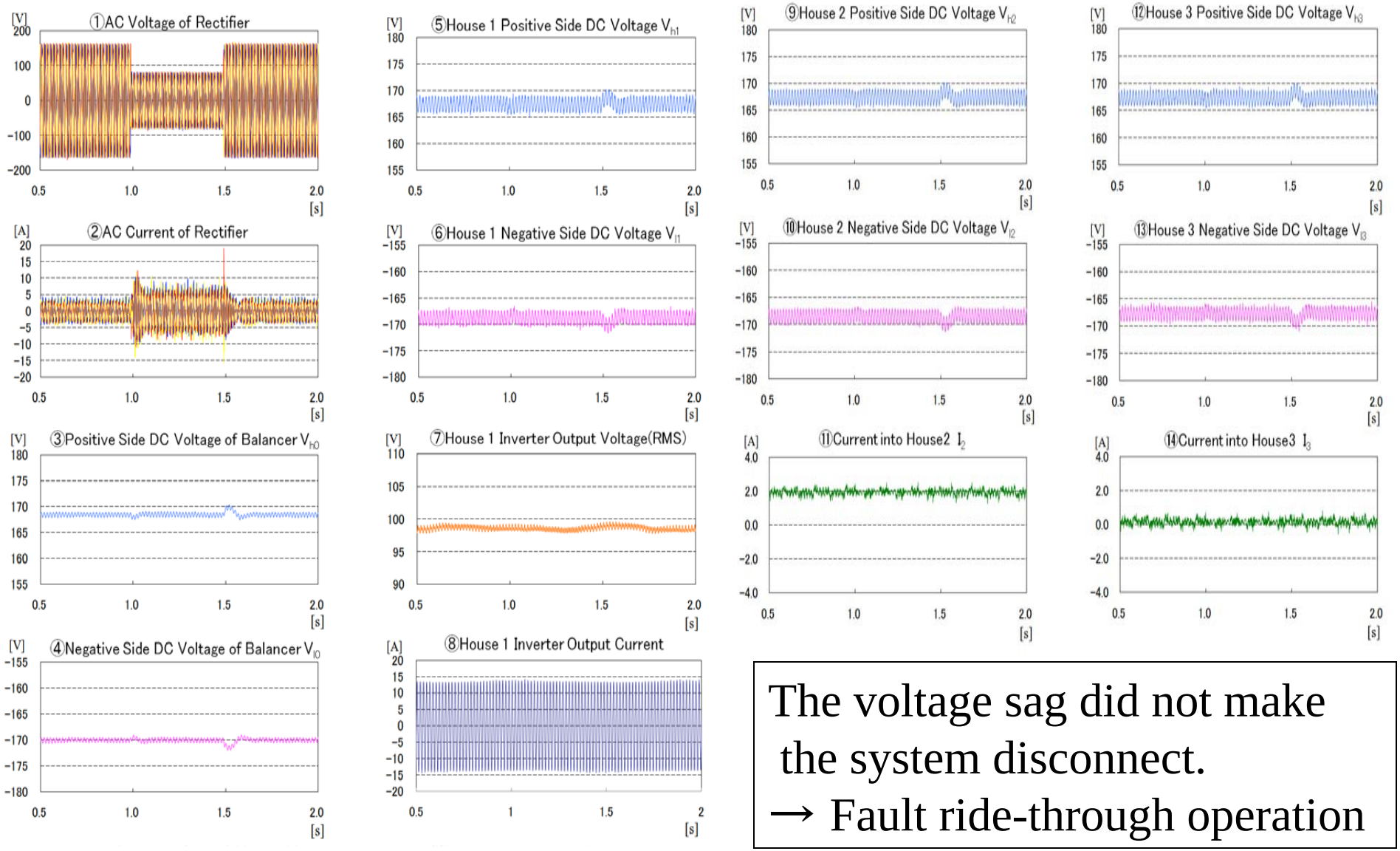

The voltage sag did not make the system disconnect.
→ Fault ride-through operation

3. System Configuration for Loss Calculation

Objective of this Research

Loss comparison between ac microgrid and dc microgrid

Losses were calculated by

- Load data measured in a residential complex
- PV output data estimated by global solar radiation and temperature of a PVpanel

(Those are whole year data measured by Osaka University.)

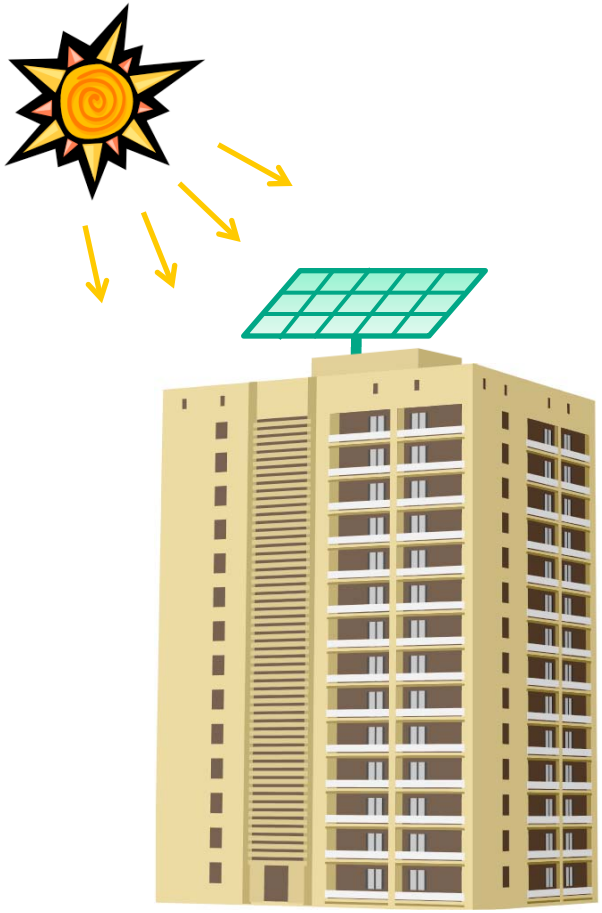

Size of Target Residential Complex

PV : 30 kW

Gas Engine 6.6 kW

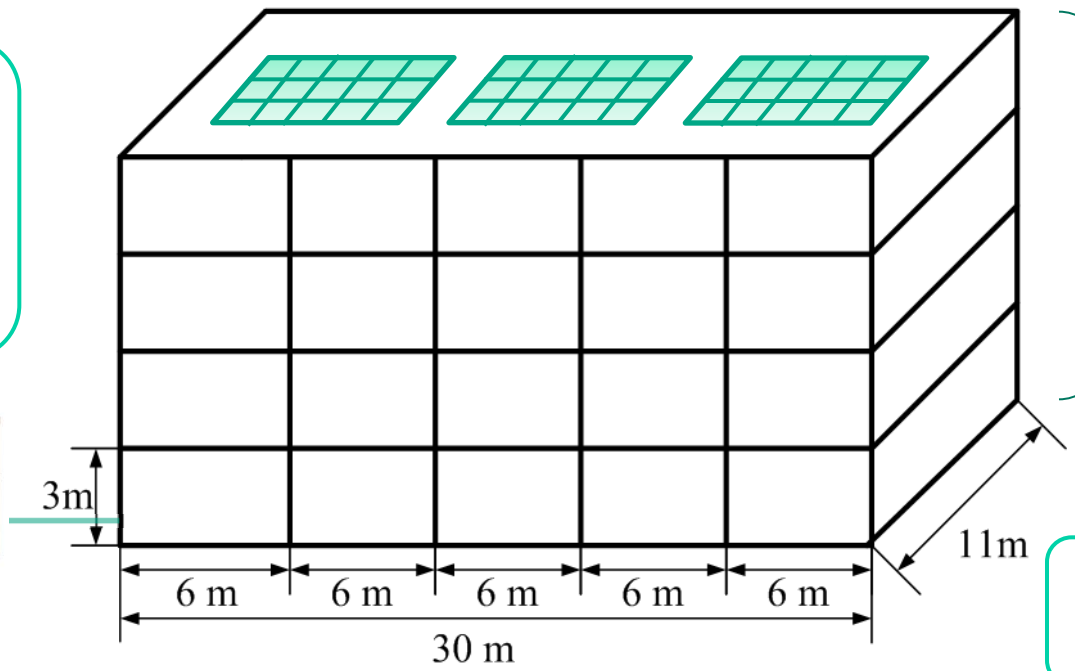

4 floors

20 houses

5 houses on a floor

Size is referred to a real residential complex in Japan

Distribution Line Configuration (AC)

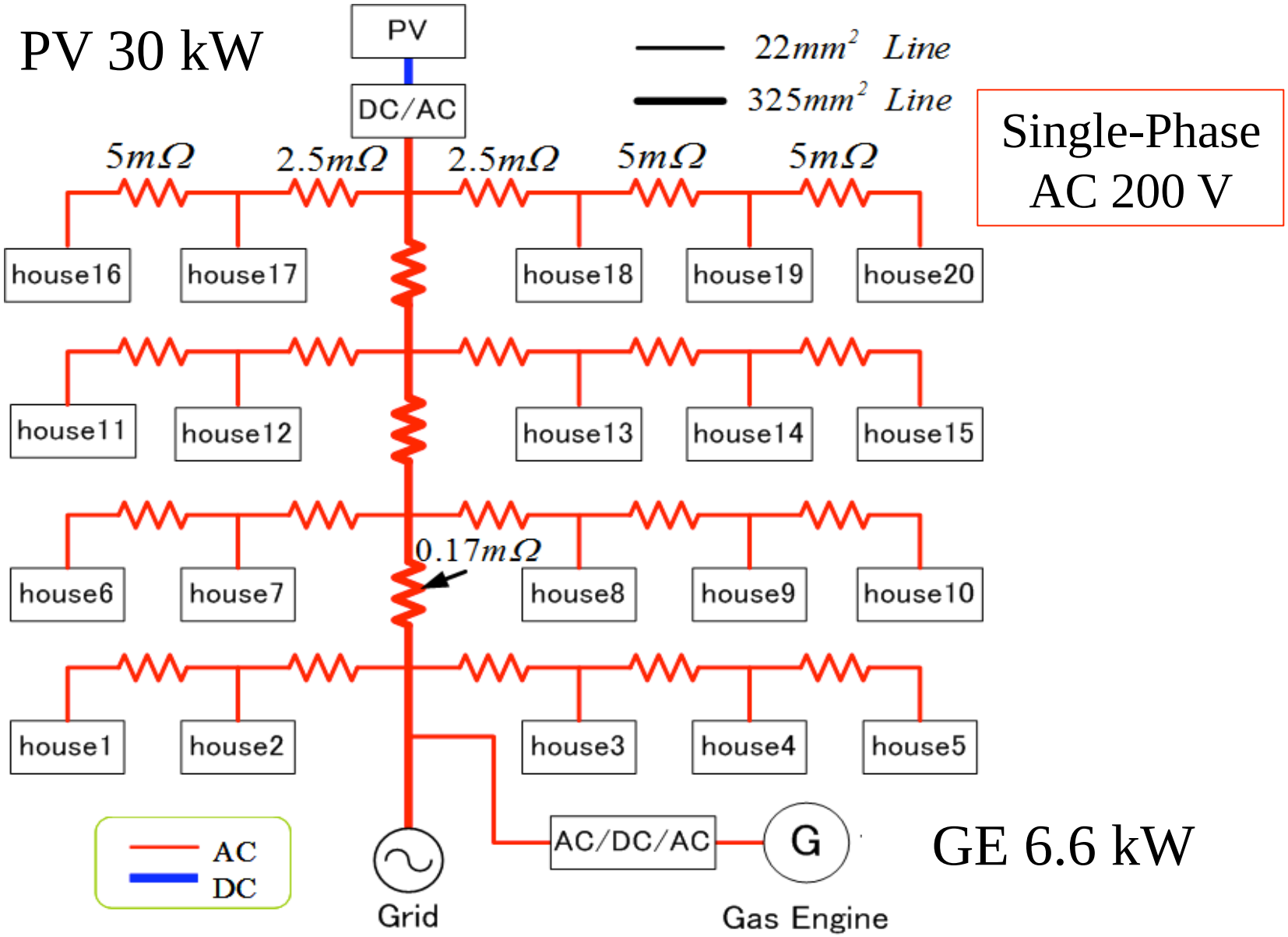

Distribution Line Configuration (DC)

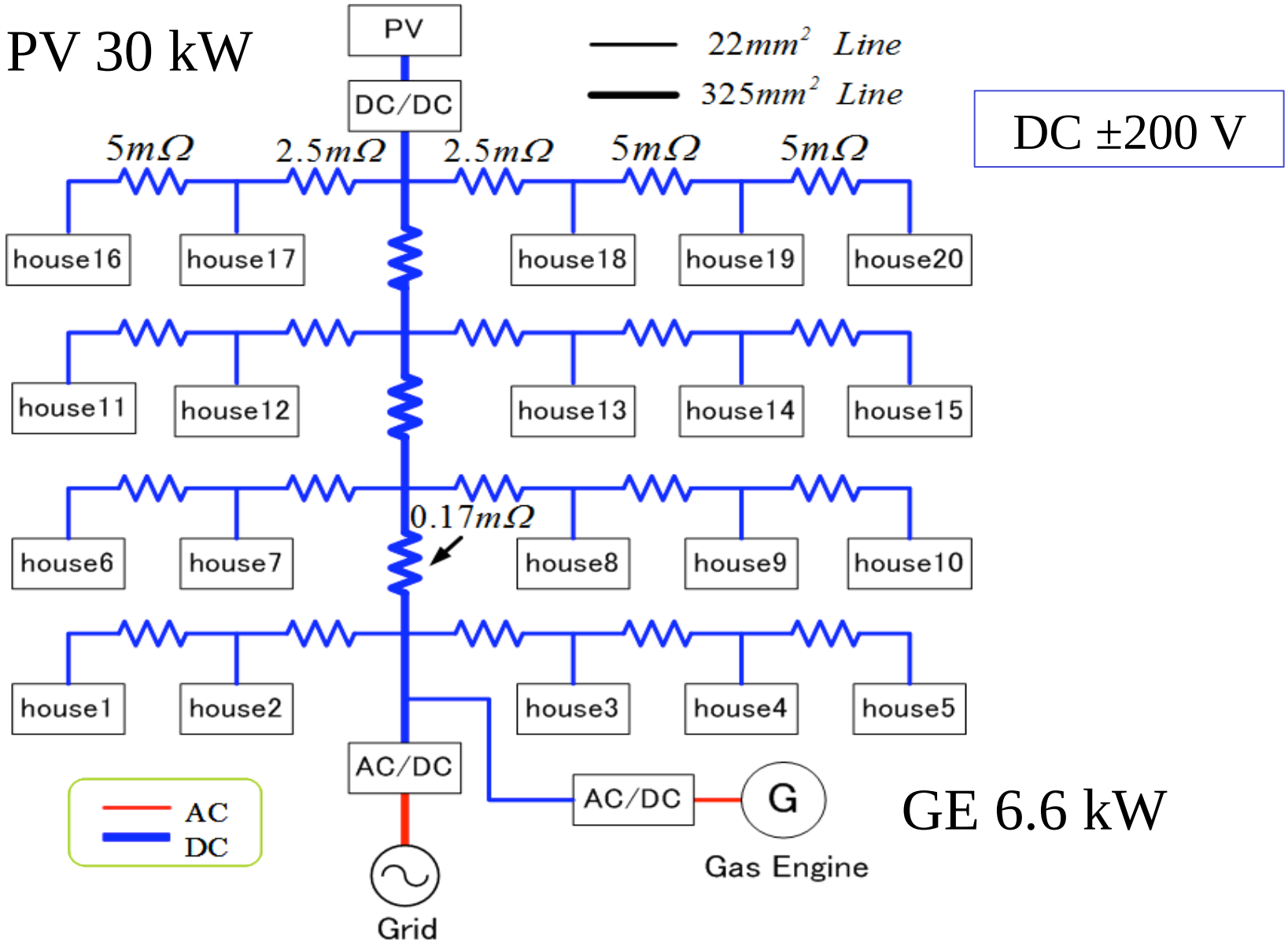

Composition of Each House (AC)

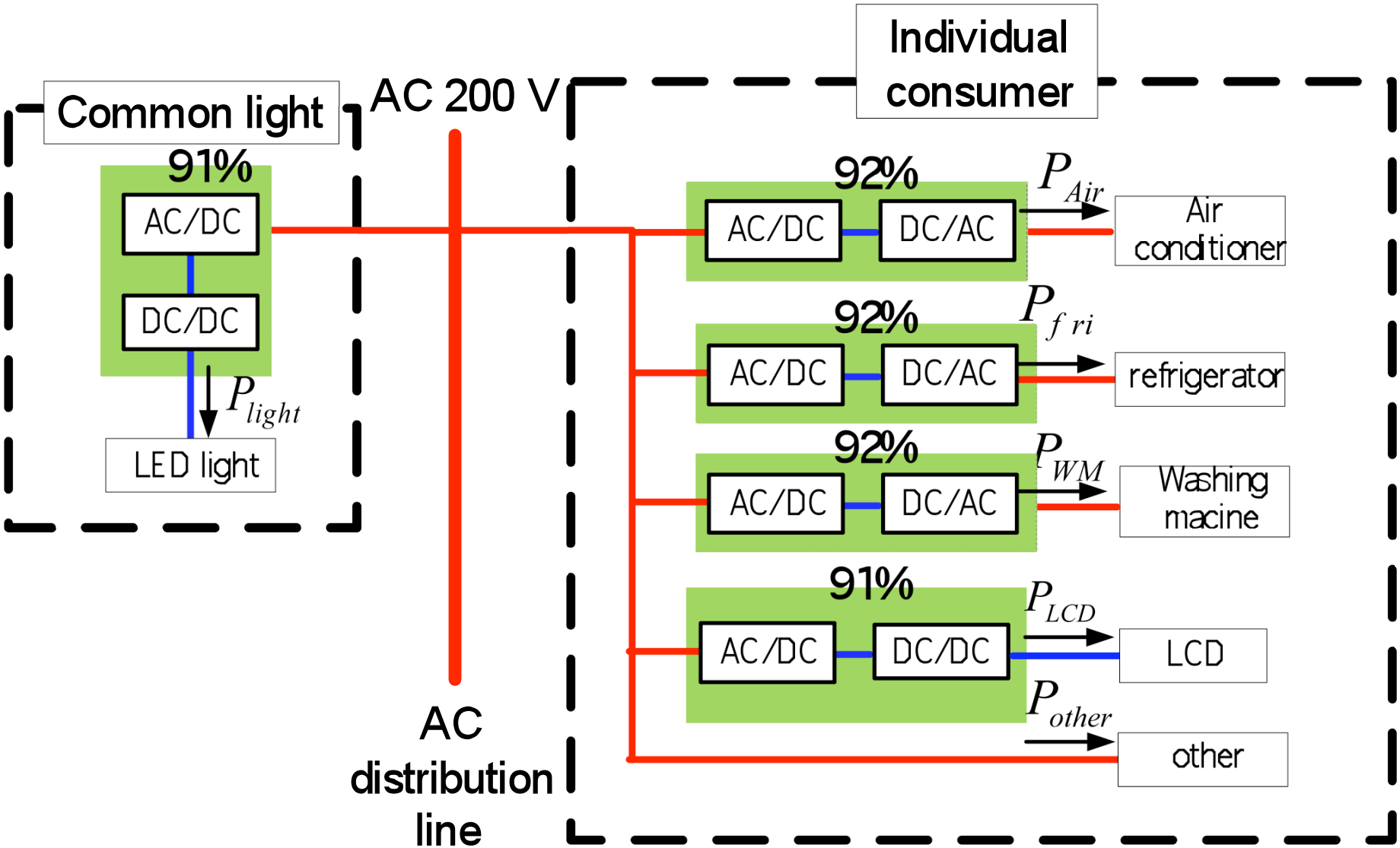

Composition of Each House (DC)

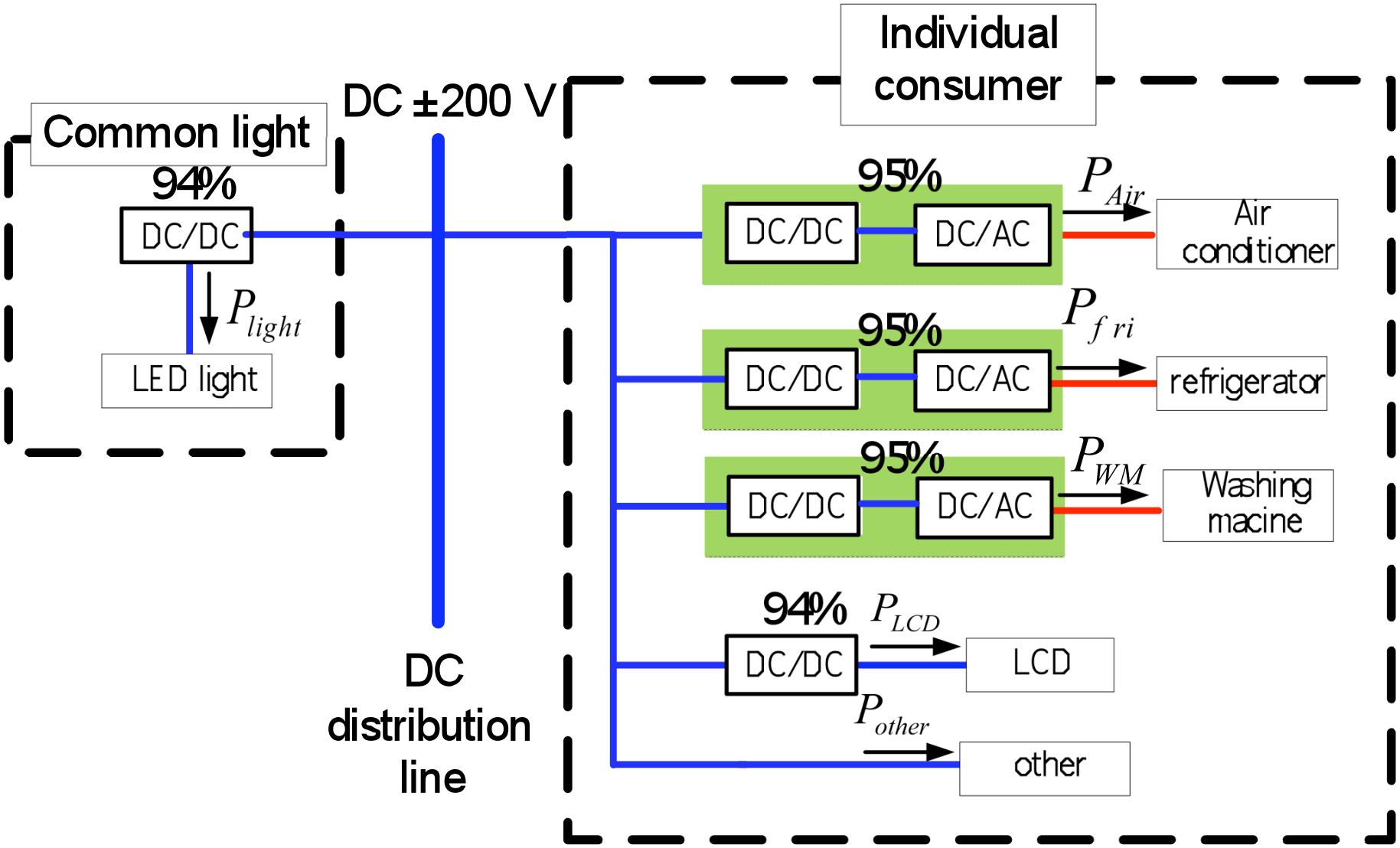

Example of Load Converter Efficiency

Refrigerator and Washing Machine

AC System

Efficiency

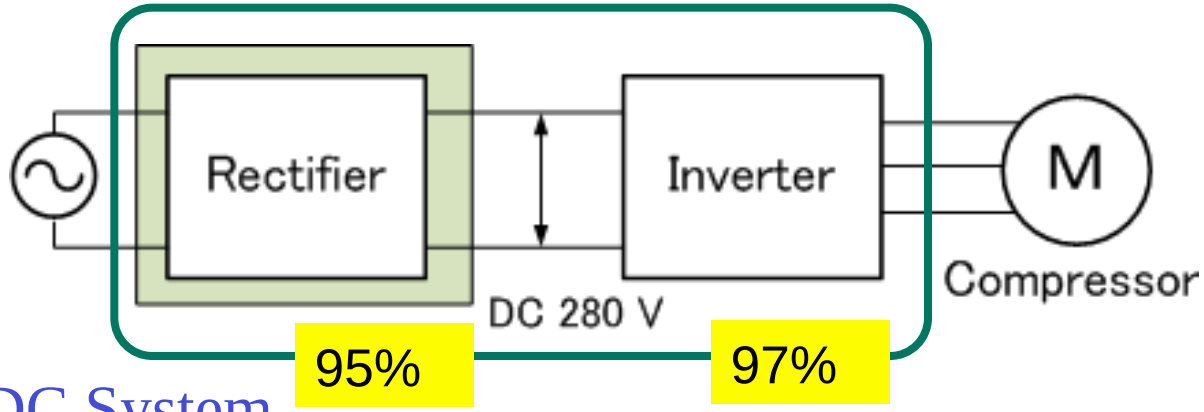

92 %

DC System

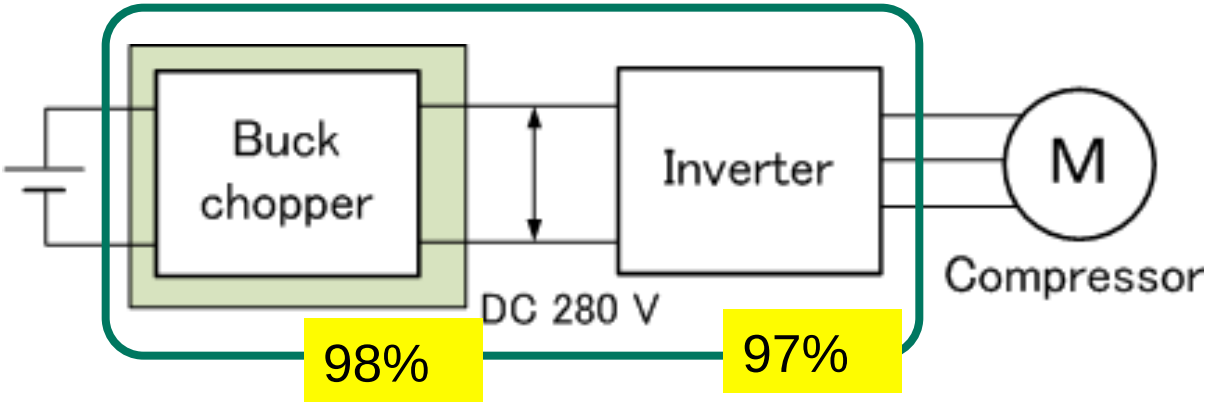

95 %

4. Data for Loss Calculation

Total Electric Power Consumption

20 houses data (measured in a residential complex)

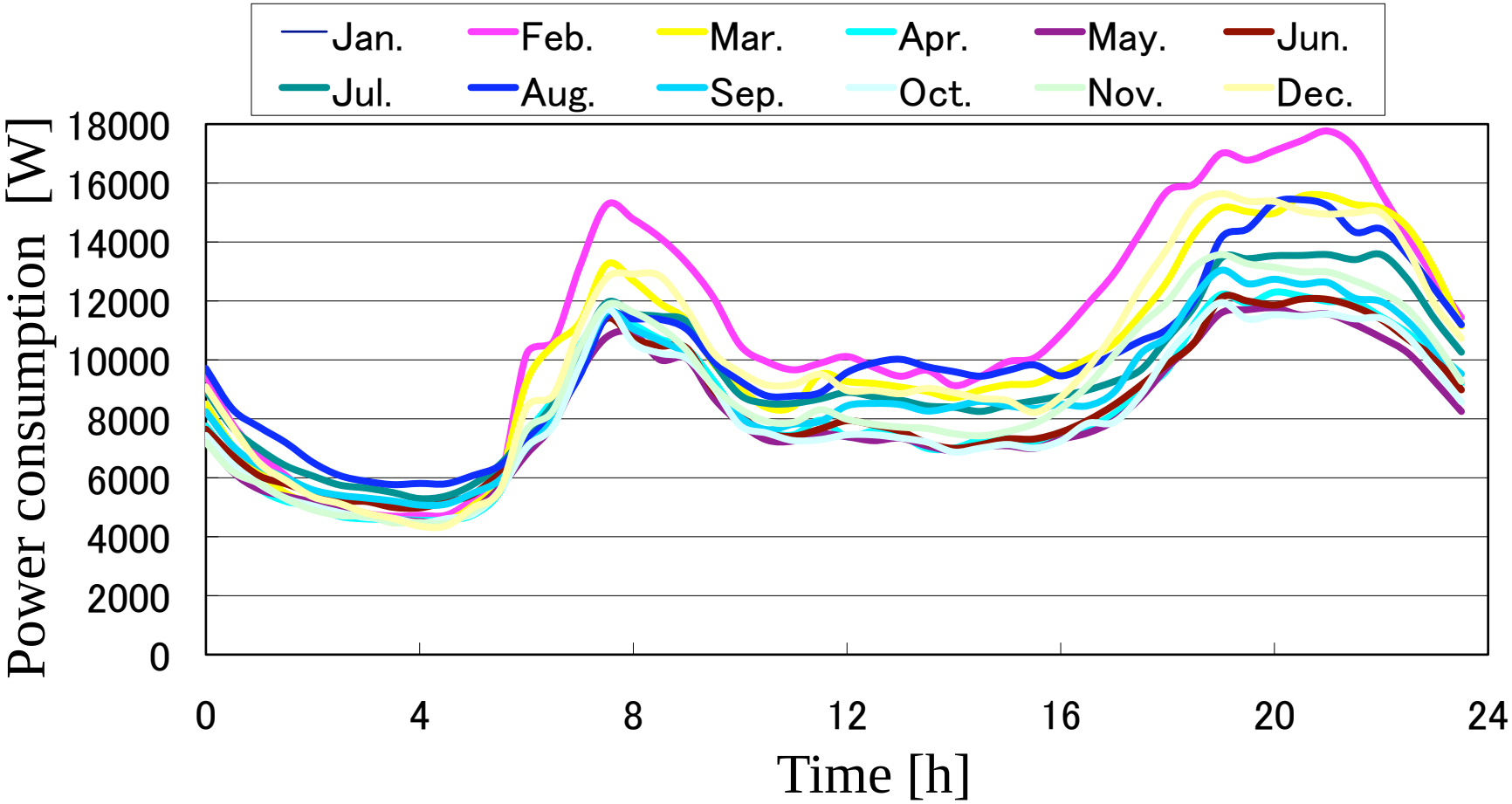

Hot-water Consumption

20 houses data (measured in a residential complex)

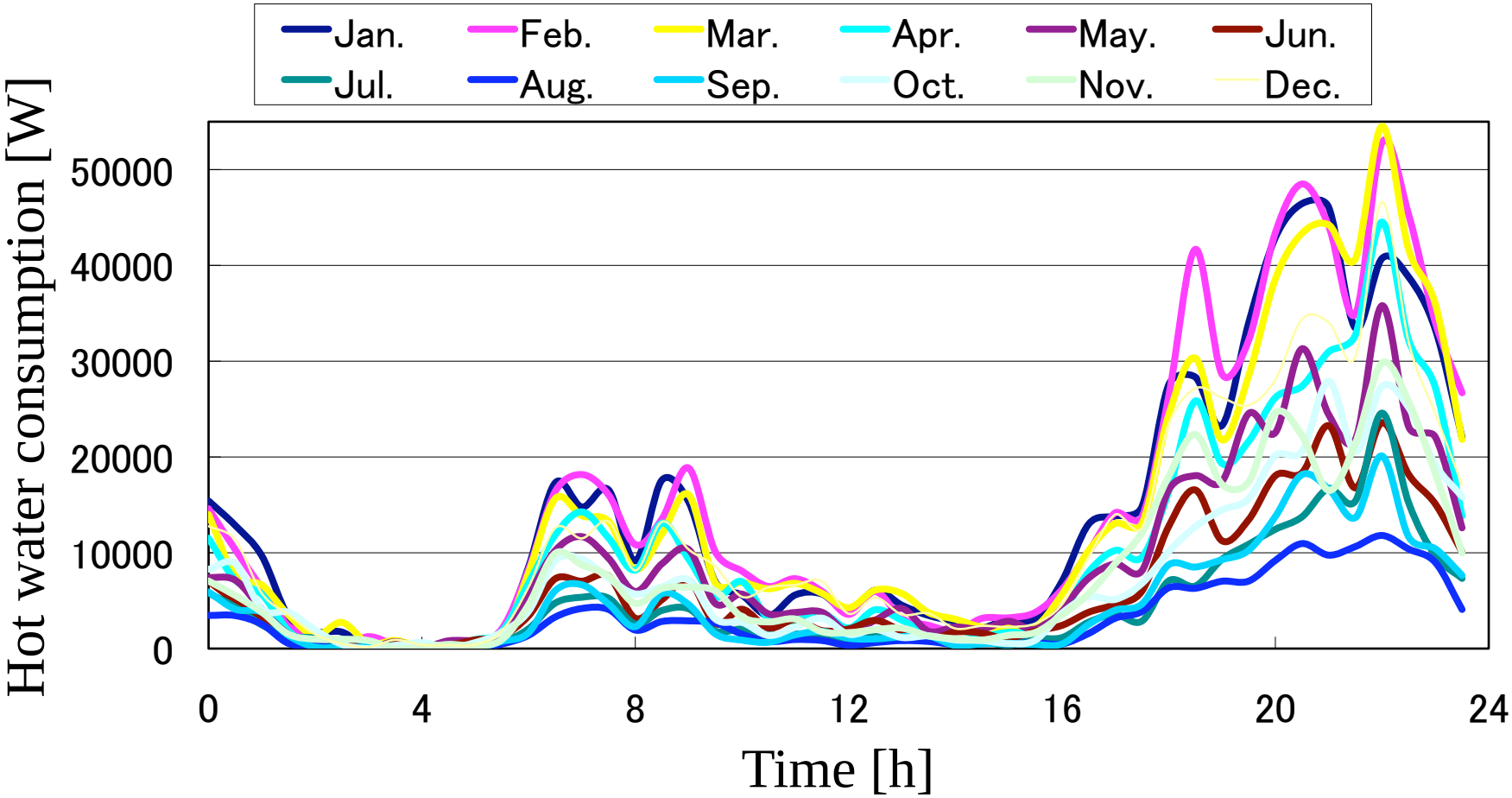

Output Data of PV System

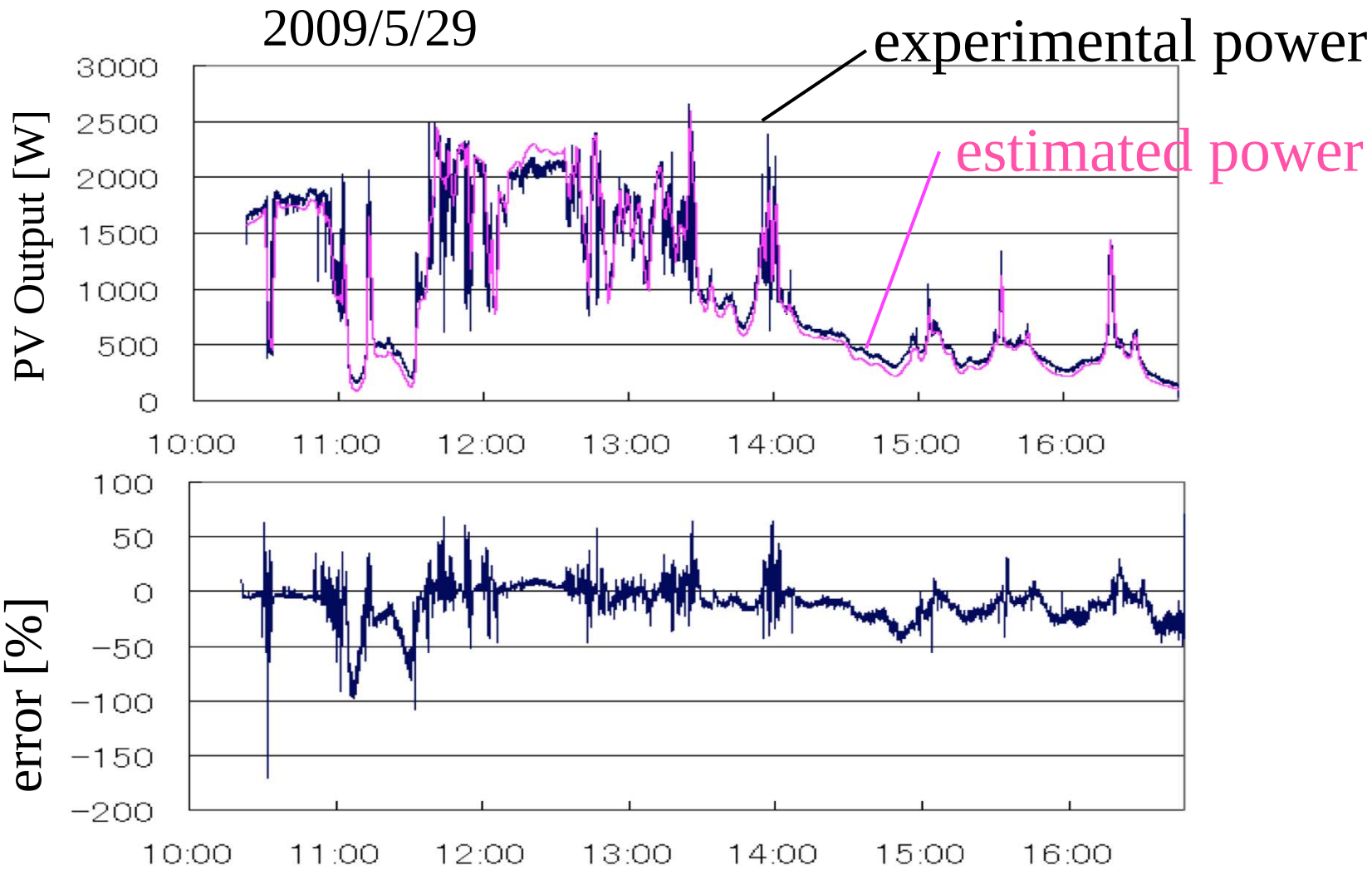

The error of total generation energy is -1.9 %.

Converter Efficiency for PV Panel

Rated Capacity is 30 kW.
PV is controlled under MPPT control.
Output power can be flown to the utility grid.

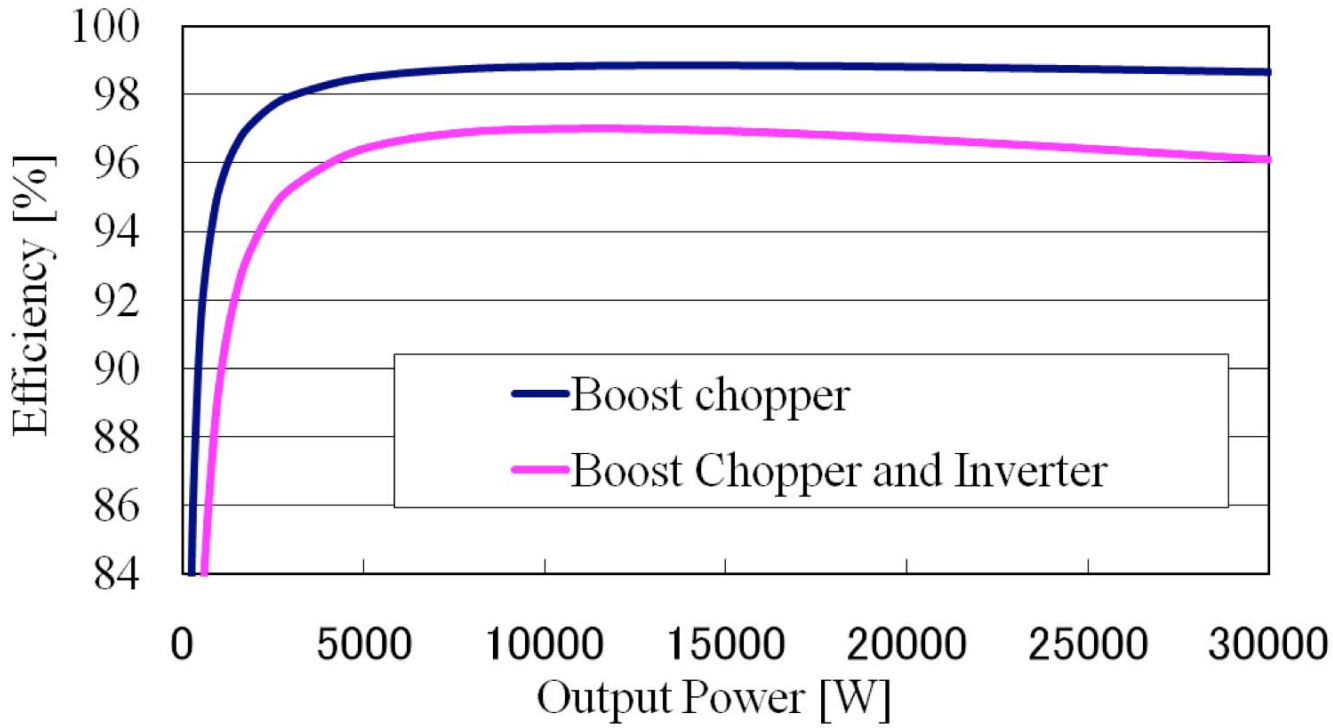

Converter Efficiency for Grid Interface (DC only)

Rated Capacity is 80 kVA (= 4 kVA x 20 houses).
A chain link type multilevel converter is assumed because of its high efficiency.

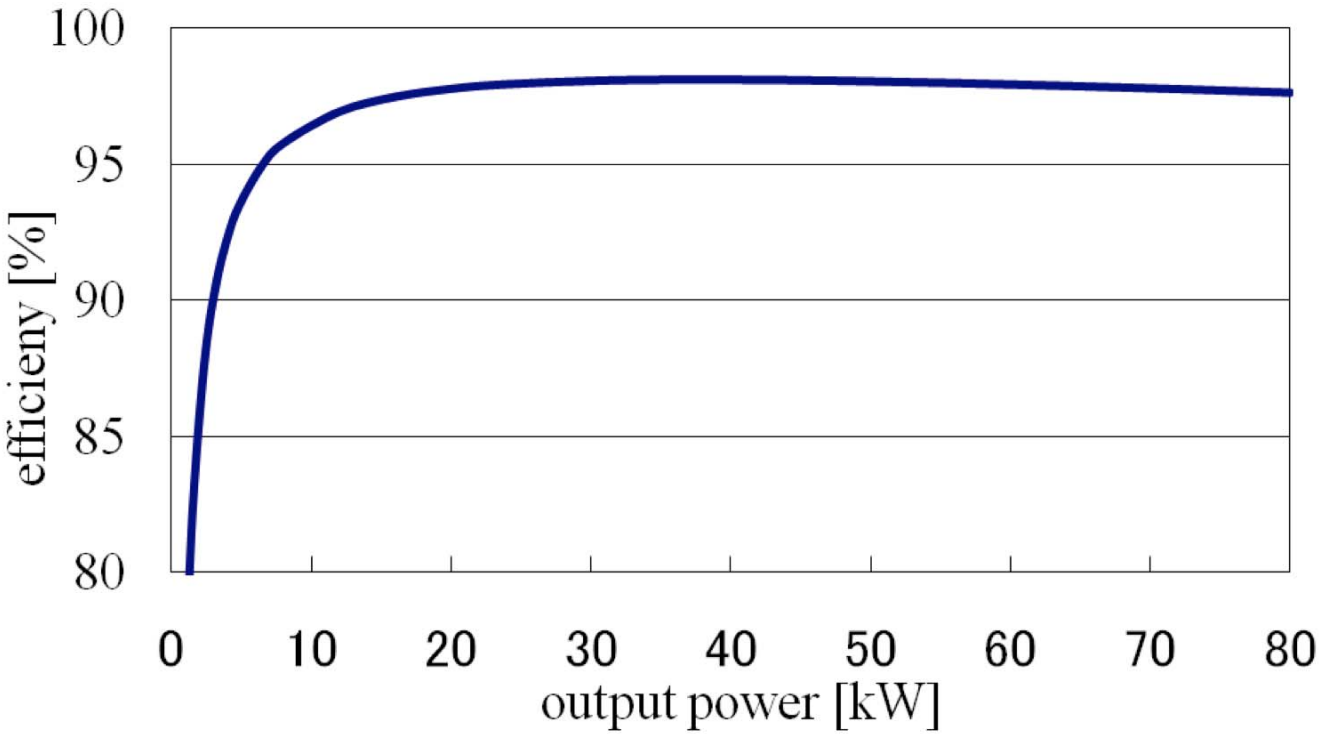

5. Results of Loss Calculation

Simulation of Loss Comparison

Loss calculation was carried out under following conditions.

Calculation step: 30 min, Period : 1 year

- Load (electricity, heat, common lights)

  Averaged data were used in each month.

- PV output (30 kW)

  Estimated data (365 days) were used.

- Gas engine (6.6 kW)

  The operation was determined from heat demand.

DG Output Energies and Consumption

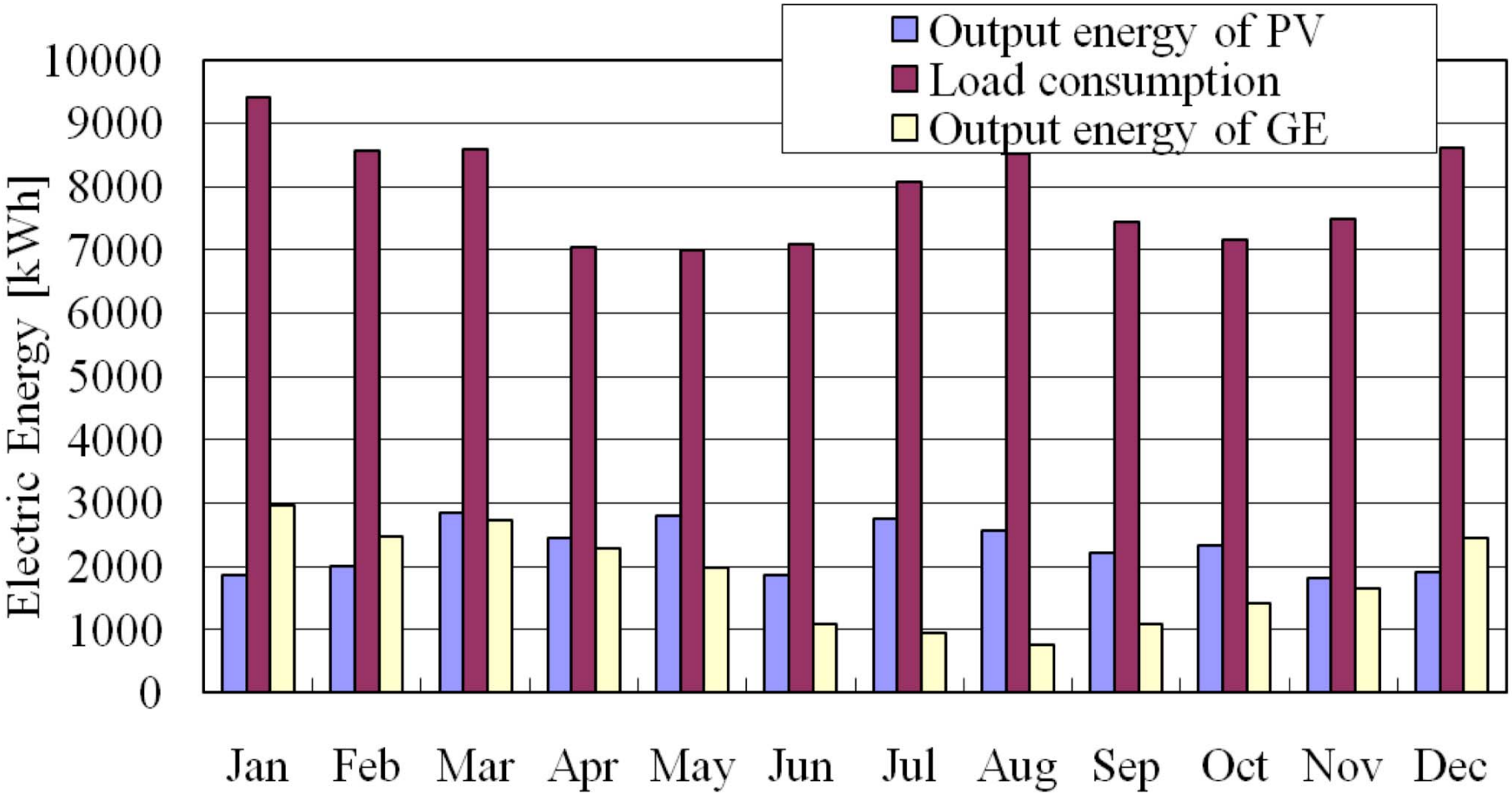

Total Losses

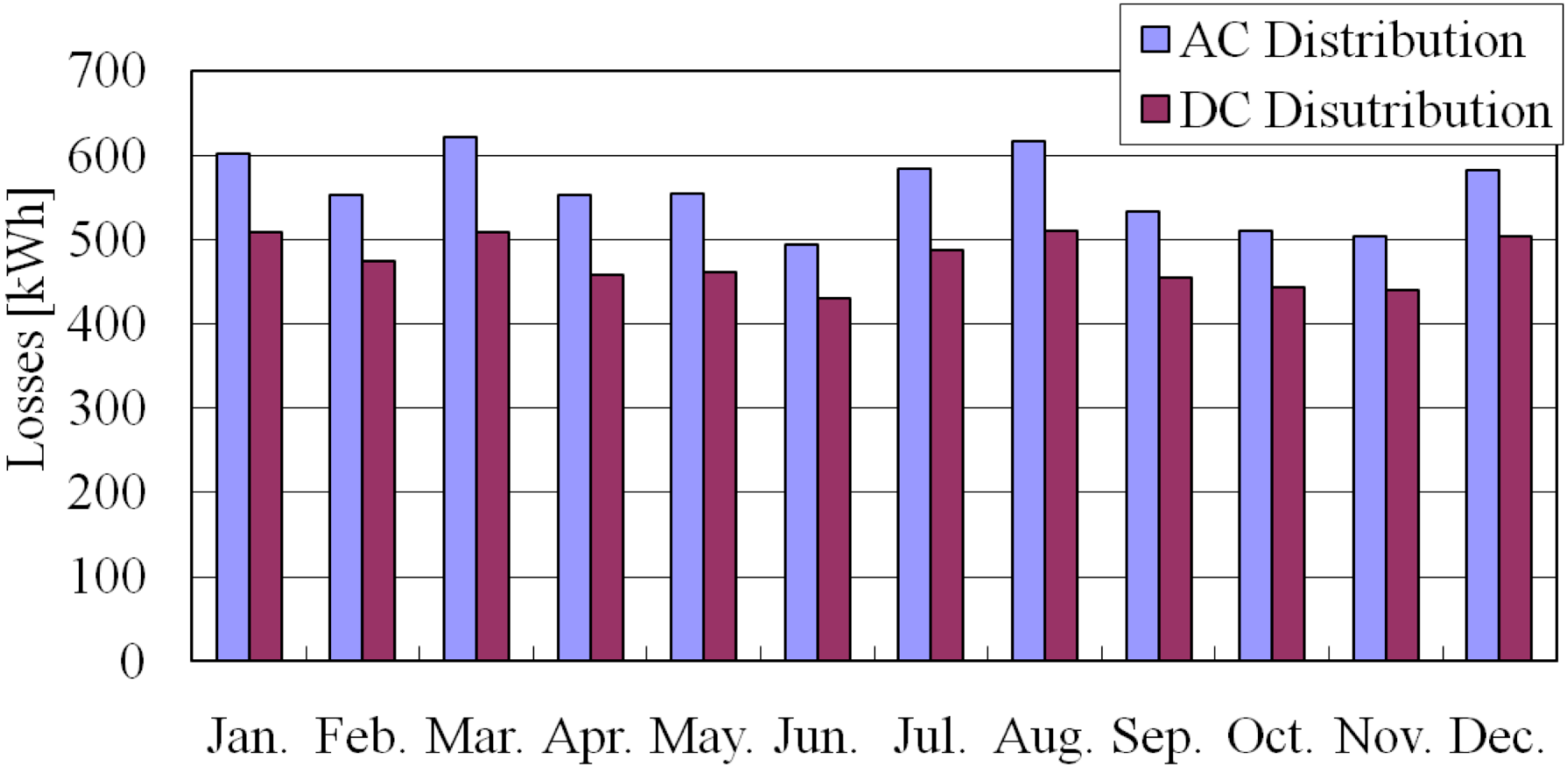

Losses of the dc system are around 15 % lower than that of the ac system for one year.

Loss Reduction Ratio

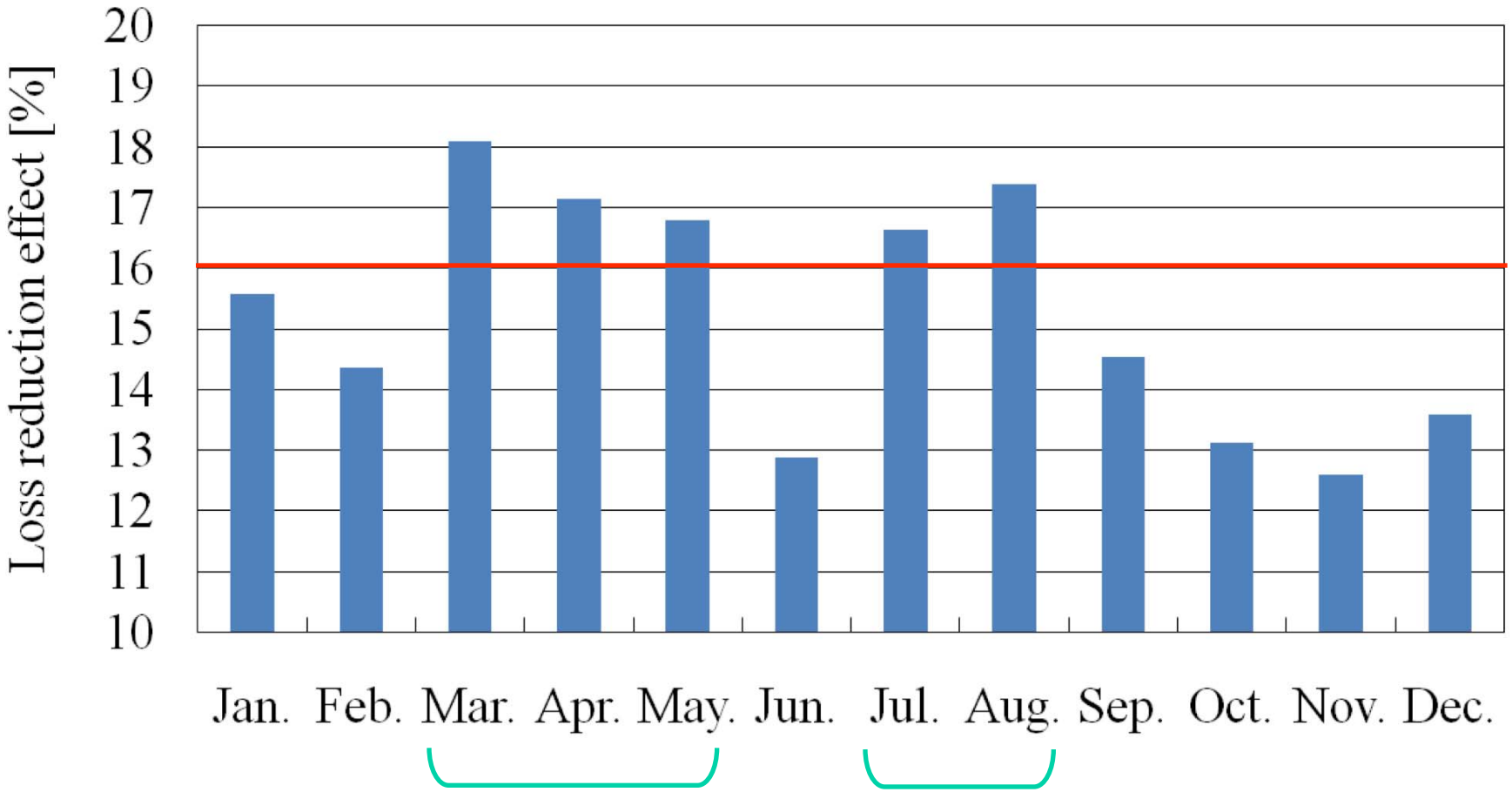

The loss reduction ratio is higher than 16 %.

Details of AC & DC System Losses

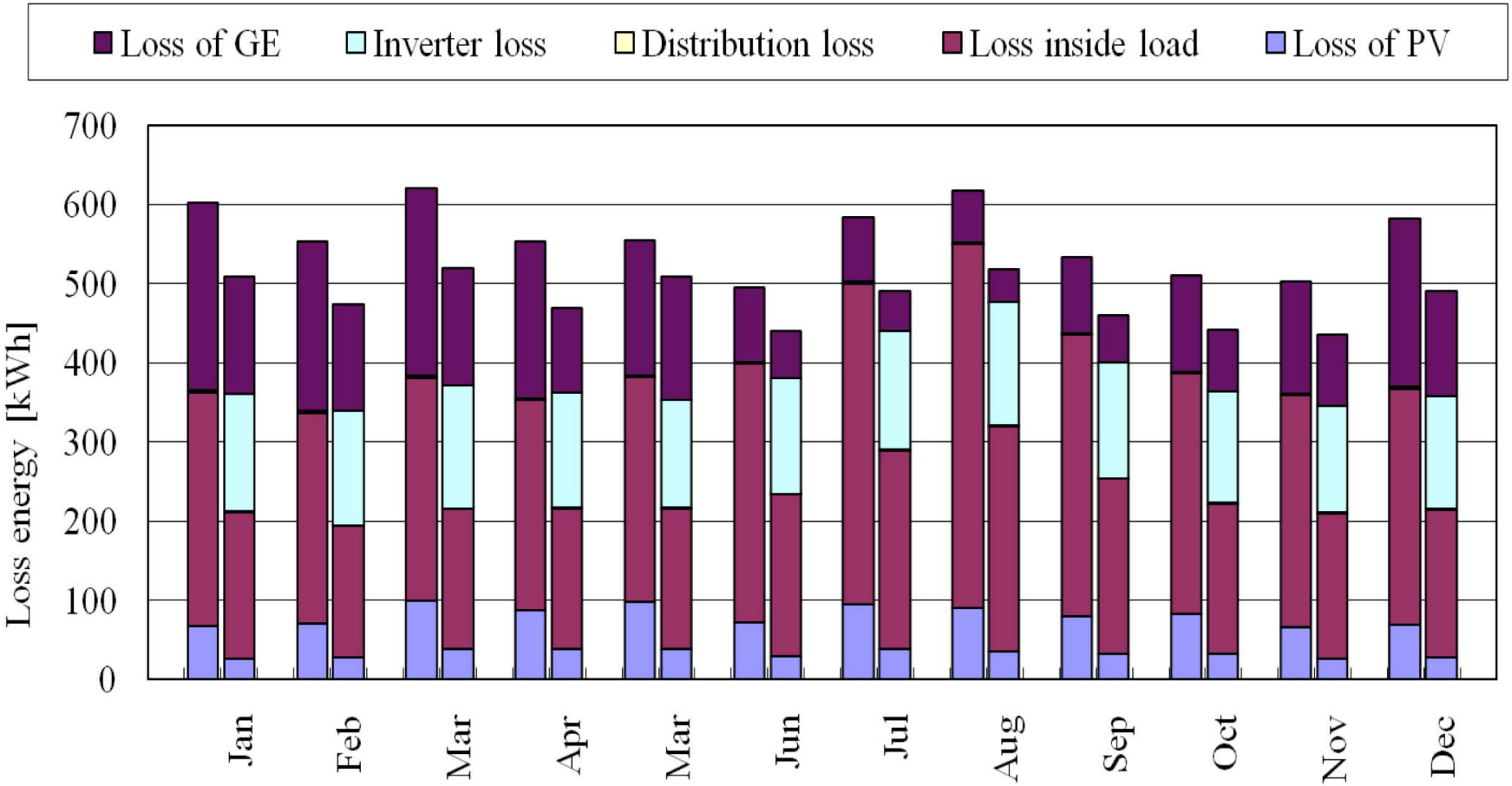

The distribution losses are negligible in both systems.

6. Conclusions

Conclusions(1)

- The configuration and operation of a low voltage bipolar type dc microgrid for residential houses was proposed.
- The experimental results by a laboratory scale model demonstrated the system's steady operation when the system was disconnected from and reconnected with the utility grid.
- The experimental results demonstrated dc microgrid was stable against voltage sags, and the fault ride-through operation was also realized by the proposed operating scheme.

Conclusions(2)

- The losses of ac and dc microgrid for residential complex are compared.
- The simulation results show that the whole losses of the dc system are around **15 % lower** than that of the ac system for a year.
- If the energy storage is included, it is expected the loss reduction effect of dc distribution becomes higher than this result.

Main Parameters

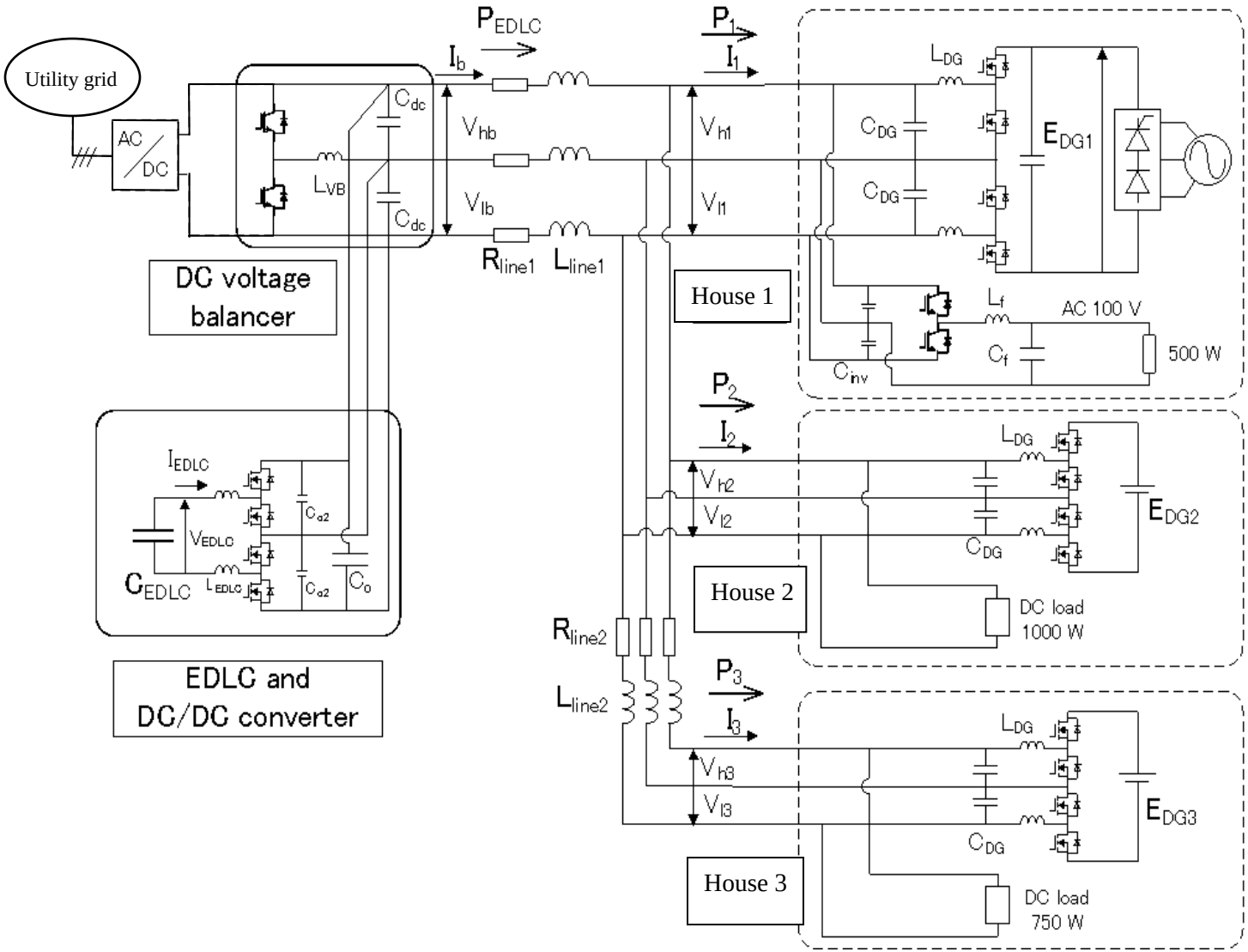

L_{VB}	4 mH
R_{line1}	0.5 Ω
L_{line1}	30 μH
R_{line2}	1 Ω
L_{line2}	30 μH
$L_{DG1,2,3}$	5 mH
$C_{DG1,2,3}$	220 μF
$E_{DG1,2,3}$	400 V
V_{1_load}	100 V
C_{finv}	12000 μF
L_{load}	2 mH
C_{load}	18.3 μF
V_{UL}	150 V
V_{UL}	120 V
C_{EDLC}	18 F
R_{EDLC}	0.16 Ω
L_{EDLC}	7 mH

PV Panel Specification

Target PV panel for the estimation

PV panel specification

solar cell	single-crystal
circuit configuration	10 series 5 parallel
optimal operation voltage	225 V
optimal operation current	12 A
maximum Power	2700 W
angle of tilt of PV panel	31°
angle of direction of PV panel	23.69°

Load Converter Efficiency

Air conditioner

Efficiency

AC System

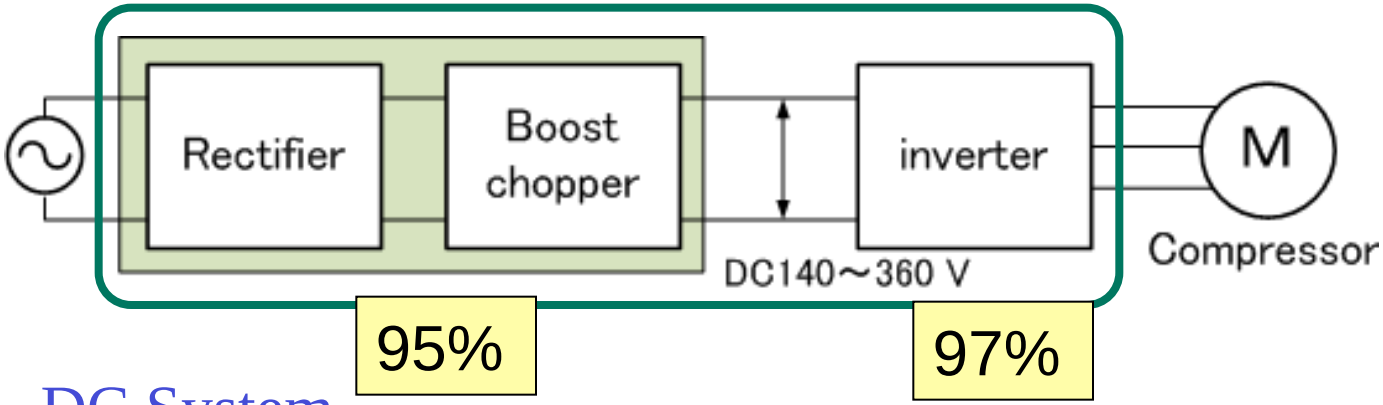

92 %

DC System

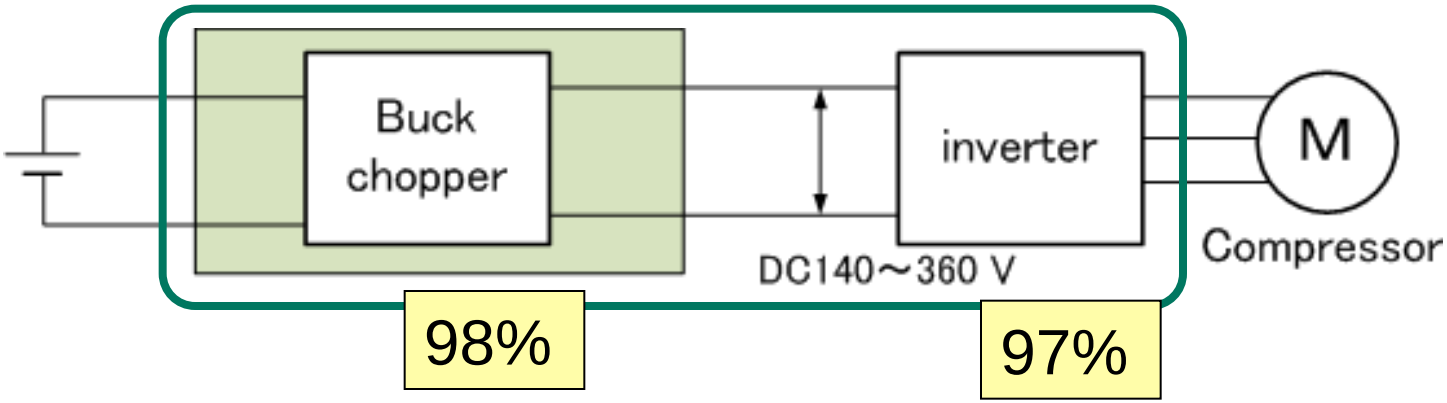

95 %

Load Converter Efficiency

Liquid Crystal Display (LCD), and LED Light

AC System

Efficiency

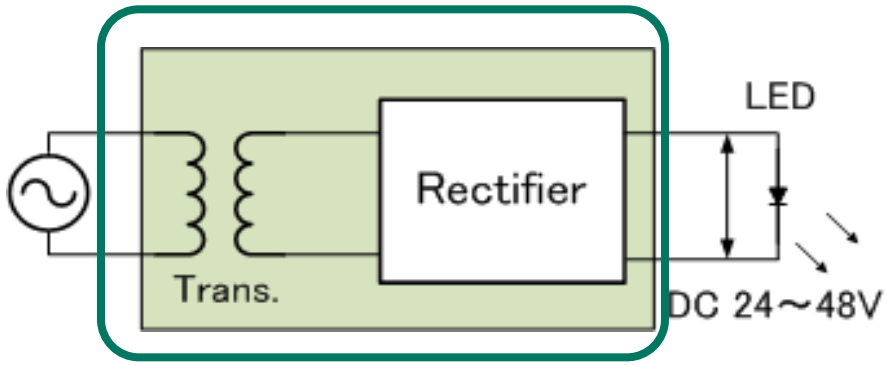

91 %

DC System

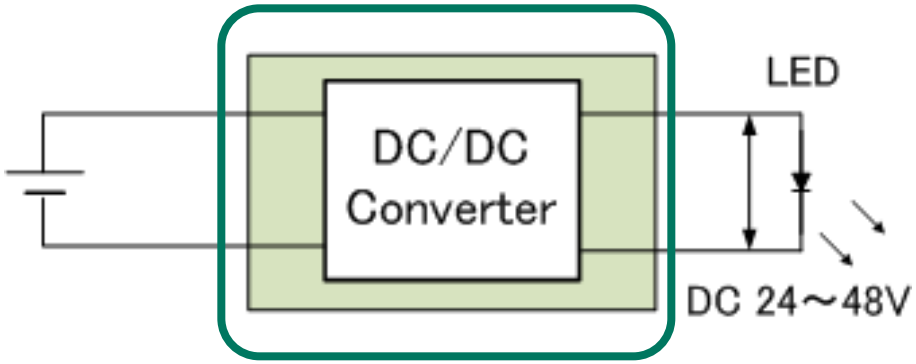

94 %

Algorism of Gas Engine Operation

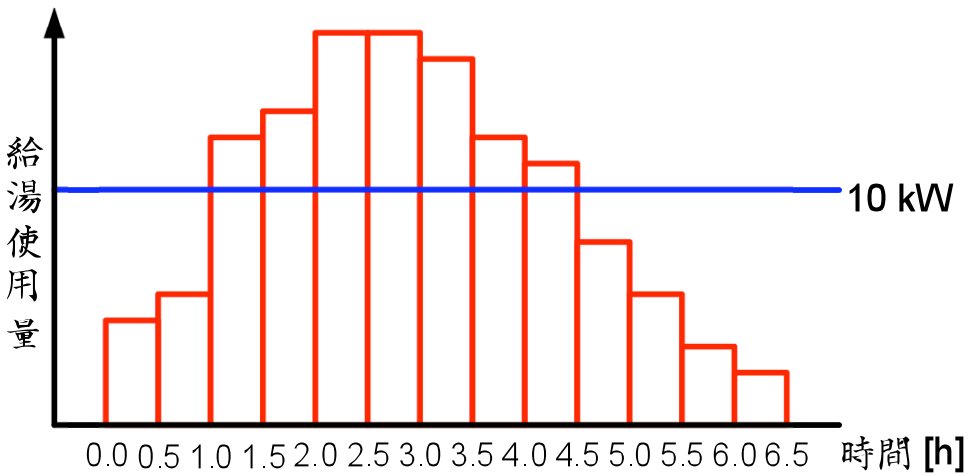

1.給湯量を参

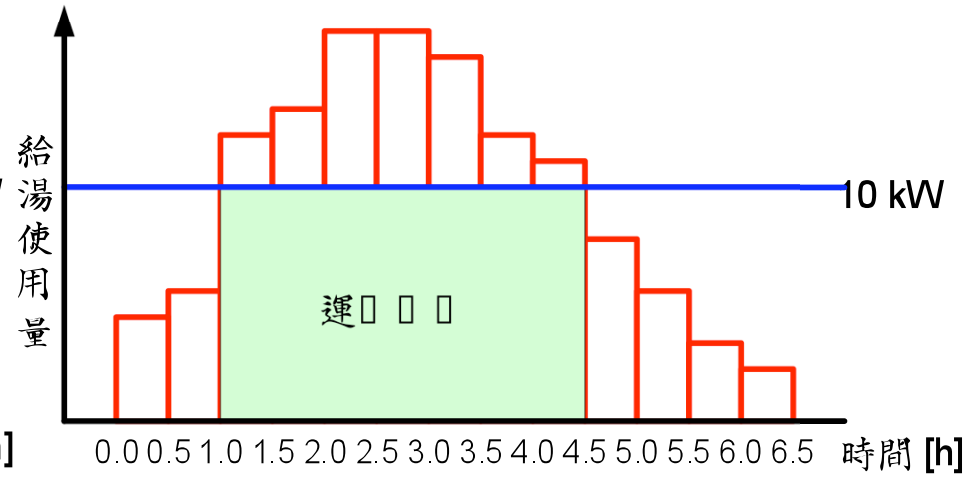

2.初期運 を決定

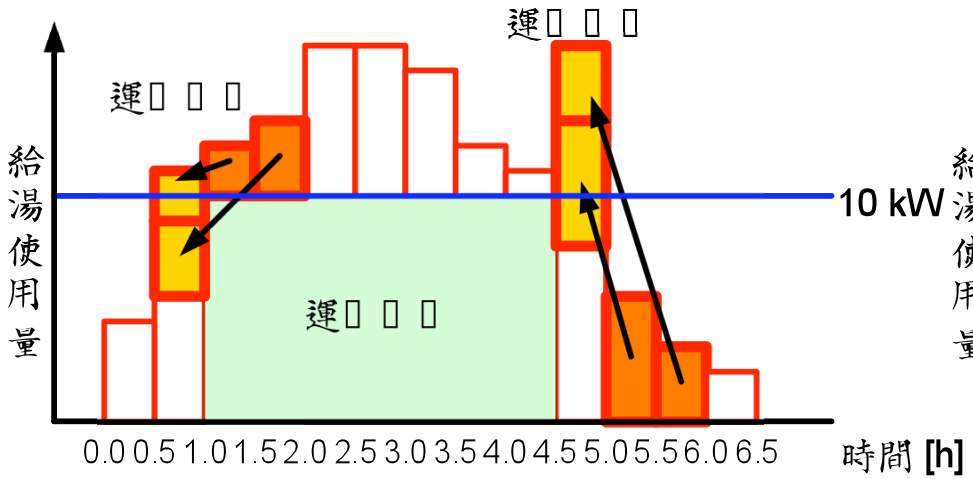

3.運 の延長を決定

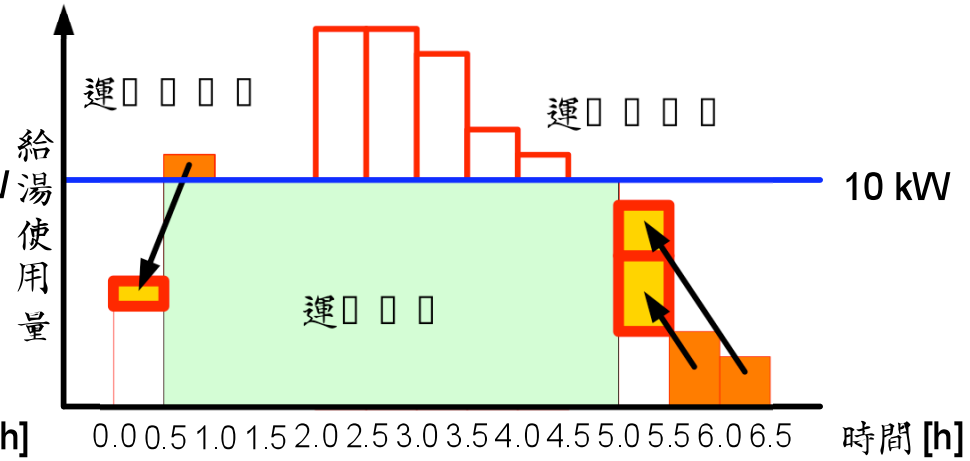

4.運 の最終決定

Consumption of Common Lights

Lights of corridors (measured in a residential complex)

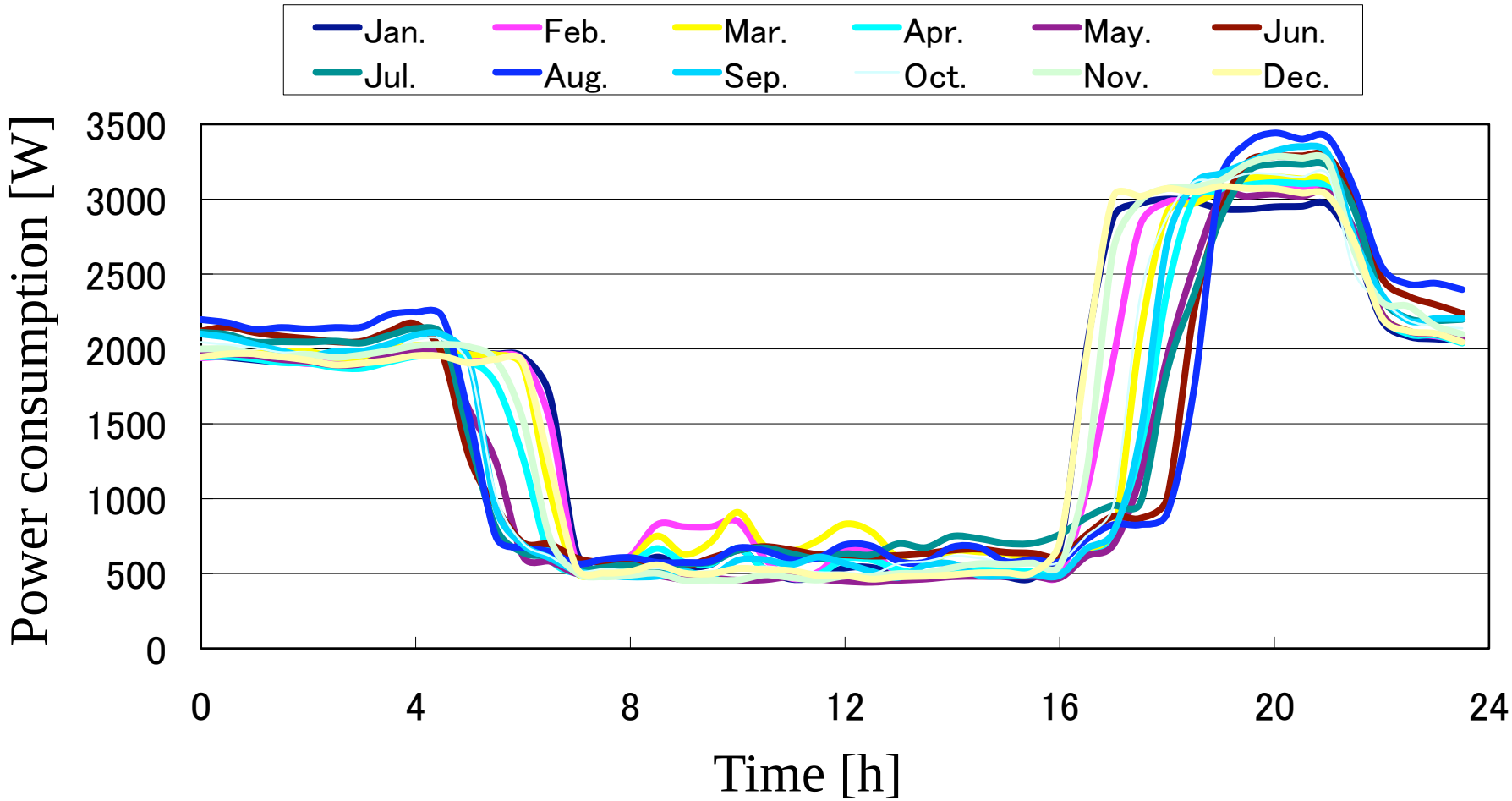

Output Power of PV System

Parameters for the estimation of the maximum power

- Temperature of PV panel surface
- Total solar radiation on PV panel

Temperature :

We measured the panel temperature minutely by a data logger

Solar radiation :

The total radiation on horizontal was measured minutely.

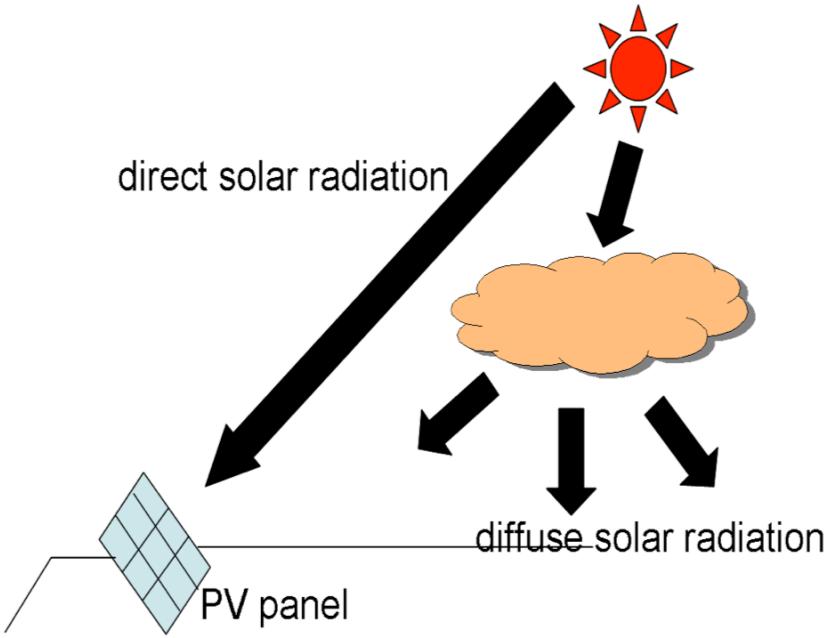

Estimation of PV Output Power

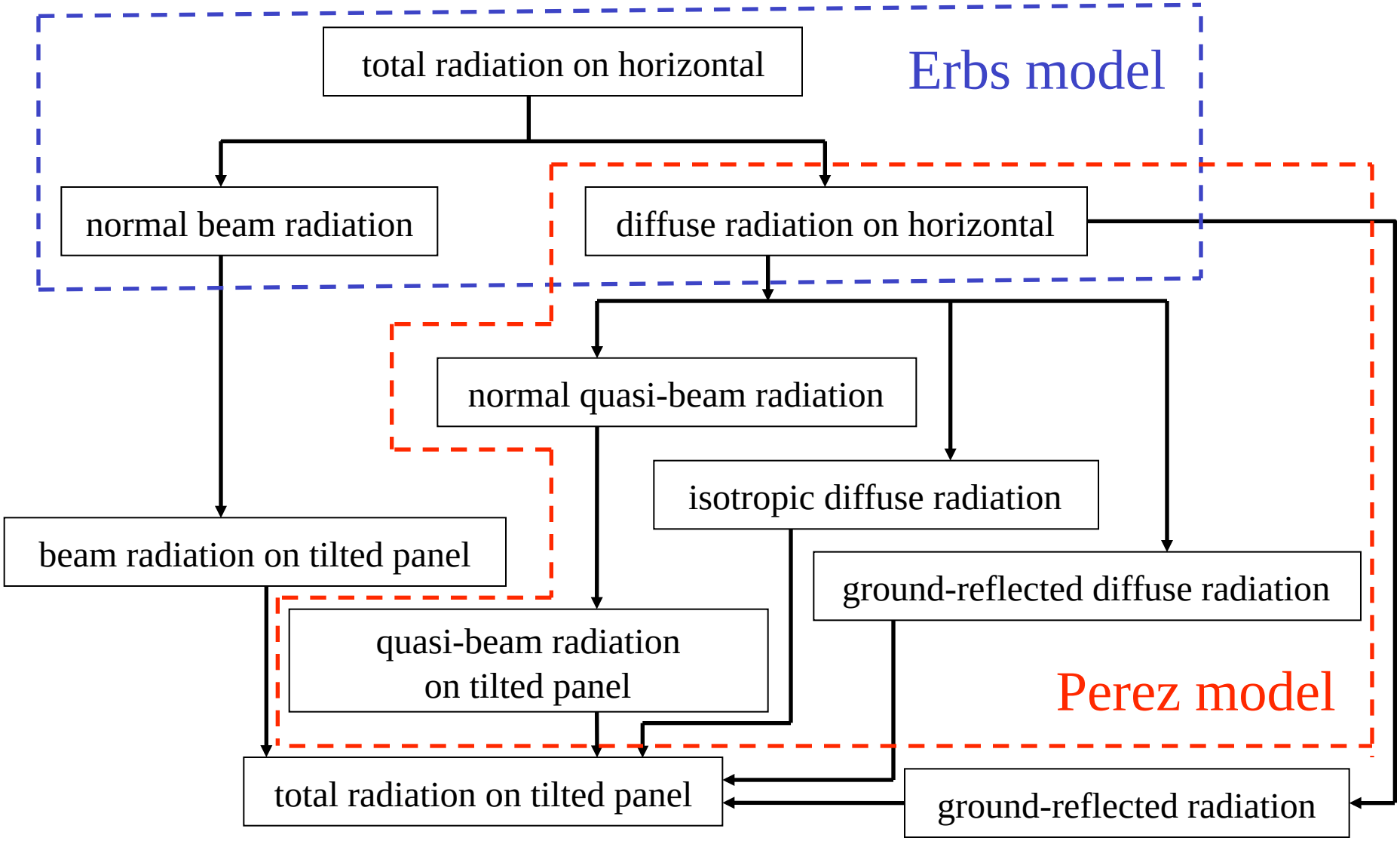

Gas Engine Operation

Rated Capacity is 6.6 kW.

The operation of the gas engine cogeneration is determined from the hot water demands.

It is assumed that output power can not be flown to the utility grid.

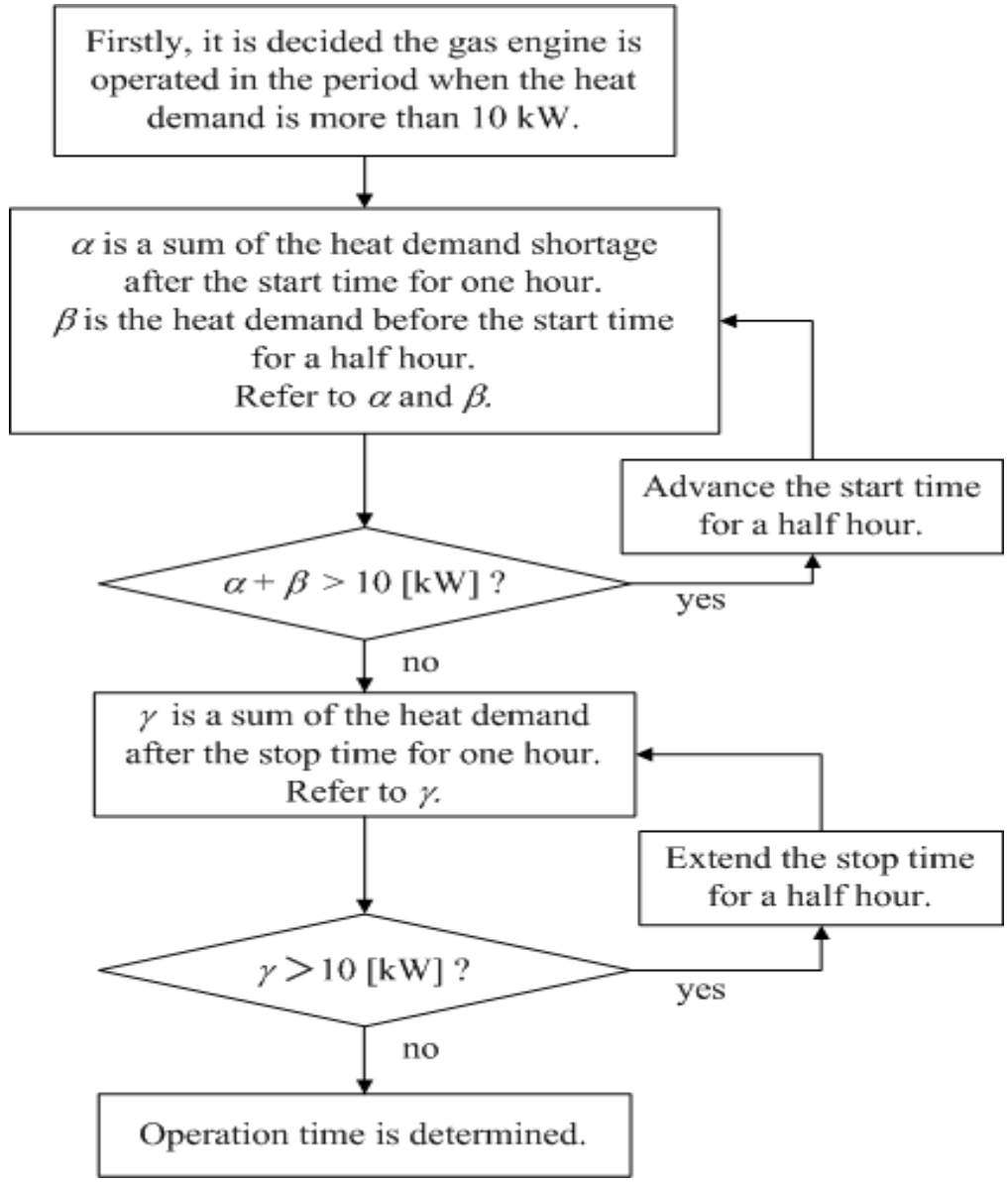

Line Loss Calculation

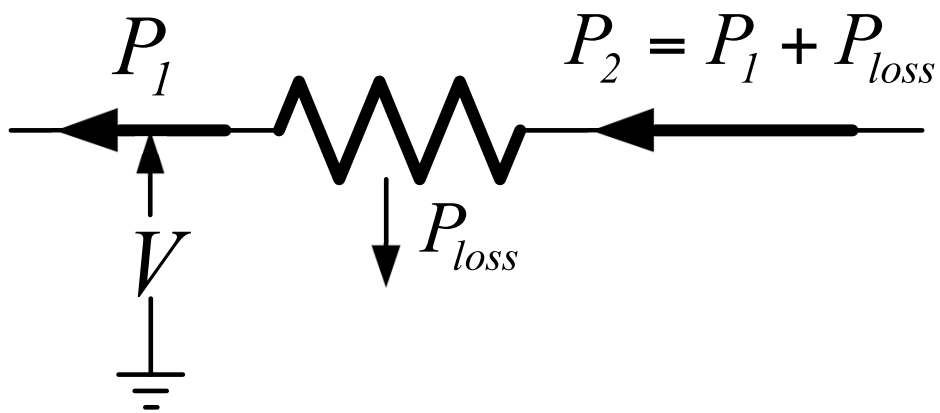

$$P_{loss} = \left(\frac{P_1}{V}\right)^2 R$$

$$P_2 = P_1 + P_{loss}$$

P_1 : Output Power

V : Voltage

P_{loss} : Loss

P_2 : Input Power